PRODUCT SPECIFICATIONS

SHARP

Mobile Liquid Crystal Displays Group

LQ038Q7DB03R

TFT-LCD Module

Spec. Issue Date: May 20, 2005

No: LCP-05007

PREPARED BY : DATE K. Fudaba May. 20. 2005	S H A R P	SPEC No. LCP-05007
CHECKED BY : DATE M. Inoue May. 20. 2005	MOBILE LIQUID CRYSTAL DISPLAY GROUP SHARP CORPORATION	FILE No. ISSUE : May. 20. 2005 PAGE : 22 pages
	SPECIFICATION	Design Center MOBILE LCD Enterprise Development Center

DEVICE SPECIFICATION FOR

TFT-LCD module

MODEL No. **LQ038Q7DB03R**

☐ CUSTOMER'S APPROVAL

DATA

BY

PRESENTED BY 中辻晴雄

H. Nakatsuji

DIVISION DEPUTY GENERAL MANAGER &
DEPARTMENT GENERAL MANAGER
Development Department V
MOBILE LCD Design Center I
MOBILE LCD GROUP
SHARP CORPORATION

SHARP

RECORDS OF REVISION

MODEL No：LQ038Q7DB03R

SPEC No ：LCP−05007

	NO.	PAGE	SUMMARY	NOTE
2005.05.18	LCP-5007	-	-	1 st Issue
				△

NOTICE

This publication is the proprietary of SHARP and is copyrighted, with all rights reserved. Under the copyright laws, no part of this publication may be reproduced or transmitted in any form or by any means, electronic or mechanical for any purpose, in whole or in part, without the express written permission of SHARP Express written permission is also required before any use of this publication may be made by a third party.

The application circuit examples in this publication are provided to explain the representative applications of SHARP's devices and are not intended to guarantee any circuit design or permit any industrial property right or other rights to be executed. SHARP takes no responsibility for any problems related to any industrial property right or a third party resulting from the use of SHARP's devices, except for those resulting directly from device manufacturing processes.

In the absence of confirmation by device specification sheets, SHARP takes no responsibility for any defects that occur in equipment using any of SHARP's devices, shown in catalogs, data books, etc. Contact SHARP in order to obtain the latest device specification sheets before using any SHARP's device.

SHARP reserves the right to make changes in the specifications, characteristics, data, materials, structures and other contents described herein at any time without notice in order to improve design or reliability. Contact SHARP in order to obtain the latest specification sheets before using any SHARP's device. Manufacturing locations are also subject to change without notice.

Observe the following points when using any device in this publication. SHARP takes no responsibility for damage caused by improper use *of the devices.*

The appropriate design measures should be taken to ensure reliability and safety when SHARP's devices are used for equipment such as:

- Transportation control and safety equipment (i.e., aircraft, trains, automobiles, etc.)
- Traffic signals
- Alarm equipment
- Gas leakage sensor breakers
- Various safety devices etc.

SHARP's devices shall not be used for equipment that requires extremely high level of reliability, such as:

- Military and space applications
- Medical equipment for life support
- Nuclear power control equipment

Contact a SHARP representative, in advance, when intending to use SHARP's devices for any "specific" applications other than those recommended by SHARP.

Contact and consult with a SHARP representative if there are any questions about the contents of this publication.

(1) Application

This literature applies to LQ038Q7DB03R.

(2) Overview

This module is a color reflective and active matrix LCD module incorporating amorphous silicon TFT (Thin Film Transistor), named AD-TFT(Advanced TFT). It is composed of a color TFT-LCD panel, driver ICs, an FPC, a back light, and a back sealed casing. It isn't composed control circuit. Graphics and texts can be displayed on a 240×3×320 dots panel with 262,144 colors by supplying.

Optimum view angle is 6 o'clock. An inverted display mode is selective in the vertical or the horizontal direction.

(3) Mechanical specifications

Table 1

Parameter	Specifications	Units	Remarks
Screen size (Diagonal)	9.54 [3.78”] Diagonal	cm	
Display active area	57.6（H）×76.8（V）	mm	
Touch panel active area	57.9（H）×77.8（V）	mm	
Pixel format	240(H)×320(V) (1 pixel = R+G+B dots)	pixels	
Pixel pitch	0.24（H）×0.24（V）	mm	
Pixel configuration	R,G,B vertical stripe		
Unit outline dimension	69.0(W)×88.6(H)×3.4(D)	mm	【Note3-1】
Mass	42	g	
Surface hardness (Touch panel)	3H		

【Note 3-1】

Excluding FPC. For detailed measurements and tolerances, please refer to Fig. 1.

(4)Pixel configuration

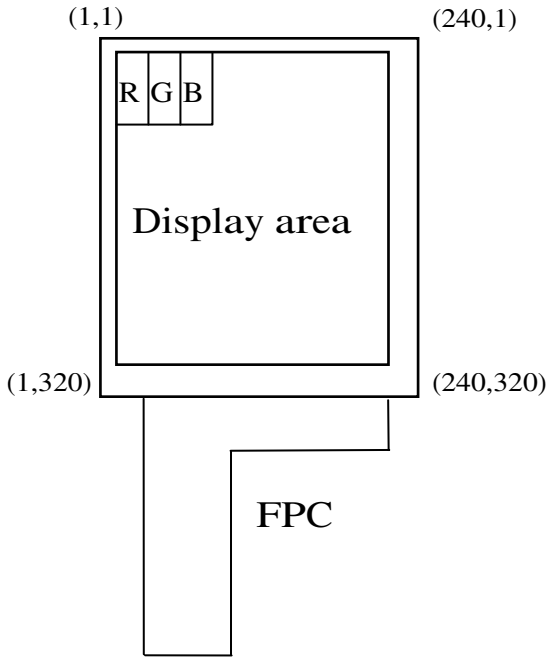

(5)Input/Output terminal

5-1)TFT-LCD panel driving section

Table2

Pin No.	Symbol	I/O	Description	Remarks
1	DGND	－	Ground(digital)	
2	VSHA	－	Power supply(analog)	
3	NC	－		
4	VSHD	－	Power supply of digital	
5	VDD	－	Power supply of gate driver(high level)	
6	NC	－		
7	VEE	－	Power supply of gate driver(low level)	
8	NC	－		
9	VCOM	I	Common electrode driving signal	【Note5-1】
10	VCOM	I	Common electrode driving signal	【Note5-1】
11	VSS	－	Power supply of gate driver(logic low)	
12	VCC	－	Power supply of gate driver(logic high)	
13	NC	－		
14	R0	I	RED data signal(LSB)	
15	R1	I	RED data signal	
16	R2	I	RED data signal	
17	R3	I	RED data signal	
18	R4	I	RED data signal	
19	R5	I	RED data signal(MSB)	
20	G0	I	GREEN data signal(LSB)	
21	G1	I	GREEN data signal	
22	G2	I	GREEN data signal	
23	G3	I	GREEN data signal	
24	G4	I	GREEN data signal	
25	G5	I	GREEN data signal(MSB)	
26	B0	I	BLUE data signal(LSB)	
27	B1	I	BLUE data signal	
28	B2	I	BLUE data signal	
29	B3	I	BLUE data signal	
30	B4	I	BLUE data signal	
31	B5	I	BLUE data signal(MSB)	
32	V0	I	Standard voltage to generate gray scale voltage	
33	V1	I	Standard voltage to generate gray scale voltage	
34	V2	I	Standard voltage to generate gray scale voltage	
35	V3	I	Standard voltage to generate gray scale voltage	
36	V4	I	Standard voltage to generate gray scale voltage	
37	NC	－		

Pin No.	Symbol	I/O	Description	Remarks
38	NC	－		
39	NC	－		
40	AGND	－	Ground(Analog)	
41	NC	－		
42	NC	－		
43	NC	－		
44	DCLK	I	Data sampling clock signal	
45	SPL	I/O	Sampling start signal	
46	LP	I	Data latch signal of source driver	
47	CLS	I	Clock signal of gate driver	
48	SPS	I	Start signal of gate driver	
49	PS	I	Power save signal	
50	NC	－		
51	MOD	I	Control signal of gate driver	【Note5-2】
52	MOD	I	Control signal of gate driver	【Note5-2】
53	U/L	I	Selection for vertical scanning direction	【Note5-3】
54	LBR	I	Selection for horizontal scanning direction	【Note5-4】
55	DGND	－	Ground(digital)	
56	SPR	I/O	Sampling start signal	
57	LED+	－	Power supply for LED (High voltage)	
58	LED+	－	Power supply for LED (High voltage)	
59	LED－	－	Power supply for LED (Low voltage)	
60	LED－	－	Power supply for LED (Low voltage)	
61	AGND	－	Ground(Analog)	

【Note5-1】See section(7-1)-(A) and【Note 7-8】

【Note5-2】See section(7-1)-(A) ”※Cautions when you turn on or off the power supply”.

【Note5-3】Selection for vertical scanning direction

U/L	Scanning direction (Pixel configuration)
High	Normal scanning (X , 1) ↑ (X , 320)
Low	Inverted scanning (X , 1) ↓ (X , 320)

【Note5-4】Selection for horizontal scanning direction

LBR	SPL	SPR	Scanning direction (Pixel configuration)
High	Input	Output	Normal scanning (1,Y) → (240,Y)
Low	Output	Input	Inverted scanning (1,Y) ← (240,Y)

(6)Absolute Maximum Ratings

Table 4

Parameter	Symbol	Condition	Ratings	Unit	Remark
Power supply(source/Analog)	V_{SHA}	Ta=25℃	－0.3～+7.0	V	
Power supply(source/Digital)	V_{SHD}	Ta=25℃	－0.3～+7.0	V	
Power supply (gate)	V_{DD}	Ta=25℃	－0.3～+35.0	V	
Power supply (gate)	$V_{EE}-V_{SS}$	Ta=25℃	－0.3～+35.0	V	
Power supply (gate)	$V_{CC}-V_{SS}$	Ta=25℃	－0.3～+7.0	V	
Power supply (gate)	$V_{DD}-V_{EE}$ (V_{SS})	Ta=25℃	－0.3～+35.0	V	
Input voltage (Analog)	V_{IA}	Ta=25℃	－0.3～V_{SHA}+0.3	V	[Terminal①]
Input voltage (Digital)	V_{ID}	Ta=25℃	－0.3～V_{SHD}+0.3	V	[Terminal②]
Operating temperature (panel surface)	T opp	－	0～50	℃	【Note6-1】
Storage temperature	T stg	－	－25～70	℃	【Note6-1】

[Terminal①] V0,V1,V2,V3,V4

[Terminal②] MOD,U/L,SPS,CLS,SPL,R0～R5,G0～G5,B0～B5,LP,DCLK,LBR,SPR,PS

【Note6-1】Humidity: 95%RH Max.(at Ta ≦ 40℃). Maximum wet-bulb temperature is less than 39℃ (at Ta > 40℃). Condensation of dew must be avoided.

(7)Electrical characteristics

7-1)Recommended operating conditions

A) TFT-LCD panel driving section

Table 6 GND=0V

Parameter		Symbol	Min.	Typ.	Max.	Unit	Remarks
Supply voltage for source driver (Analog)		V_{SHA}	+4.5	+5.0	+5.5	V	
Supply voltage for source driver (Digital)		V_{SHD}	+3.0	+3.3	+3.6	V	
Standard input voltage		V0～V4	0	－	V_{SHA}	V	【Note 7-1】
Supply voltage for gate driver	High voltage	V_{DD}	+14.5	+15.0	+15.5	V	
	Logic high voltage	V_{CC}	$V_{SS}+V_{SHD}$ －0.1	$V_{SS}+V_{SHD}$	$V_{SS}+V_{SHD}$ ＋0.1	V	【Note 7-2】
	Logic low voltage	V_{SS}	－14.3	－15.0	－15.7	V	
	Low voltage (AC)	V_{EEAC}	－	V_{COMAC}	－	Vp-p	【Note 7-3】
	Low voltage (DC)	V_{EEDC}	－9.5	－9.0	－8.5	V	【Note 7-3】
Input voltage for Source driver (Low)		V_{ILS}	GND	－	$0.2V_{SHD}$	V	【Note 7-4】
Input voltage for Source driver (High)		V_{IHS}	$0.8V_{SHD}$	－	V_{SHD}	V	【Note 7-4】
Input current for Source driver (Low)		I_{ILS}	－	－	30	μA	【Note 7-4】
Input current for Source driver (High)		I_{IHS1}	－	－	30	μA	【Note 7-5】
		I_{IHS2}	－	－	1200	μA	【Note 7-6】
Input voltage for Gate driver (Low)		V_{ILG}	GND	－	$0.2V_{SHD}$	V	【Note 7-7】
Input voltage for Gate driver (High)		V_{IHG}	$0.8V_{SHD}$	－	V_{SHD}	V	【Note 7-7】
Input current for Gate driver (Low)		I_{ILG}	－	－	4	μA	【Note 7-7】
Input current for Gate driver (High)		I_{IHG}	－	－	4	μA	【Note 7-7】
Common electrode driving signal	AC component	V_{COMAC}	－	±2.5	±2.6	Vp-p	【Note 7-8】
	DC component	V_{COMDC}	+0.1	+1.1	+2.1	V	【Note 7-8】

※Cautions when you turn on or off the power supply

① Turn on or off the power supply with simultaneously or the following sequence.

Turn on … V_{SHD}→V_{SHA} → V_{SS} → V_{CC} → V_{EE} → V_{DD}

Turn off … V_{DD} → V_{EE} → V_{CC} → V_{SS} →V_{SHA}→ V_{SHD}

② The input signal of "MOD" Terminals(Pin No.51 and No.52) must be low voltage when turning on the power supply, and it is held until more than double vertical periods after V_{CC} is turned on completely. After then, it must be held high voltage until turning off the power supply.(Connect Pin No.51 and No.52 terminals to the same signal.)

【Note 7-1】These are standard input voltages for gray scale. When V_{COM} is alternated polarity, these voltage should be alternated polarity. V0(black) is different polarity alternating signal of V_{COM}. V4(white) is the same polarity alternating signal of V_{COM}. Center voltage of each standard input voltage shift positive way for LCD characteristics (V0→V1→V2→V3→V4). This sift amount is adjusted so as to no flicker of each standard input voltage after DC bias voltage of V_{COM} and V0 is adjusted.

【Note 7-2】It must be kept that 3.0V≦(V_{CC}-V_{SS})≦3.6V.

【Note 7-3】The same phase and amplitude with V_{COM}. V_{EEDC} is center of V_{EE}.

【Note 7-4】DCLK,SPL,SPR,LBR,LP,PS,R0～R5,G0～G5 and B0～B5 terminals are applied.

【Note 7-5】DCLK,SPL,SPR,LBR,LP,R0～R5,G0～G5 and B0～B5 terminals are applied.

【Note 7-6】PS terminal is applied.

【Note 7-7】MOD,CLS,SPS and U/L terminals are applied.

【Note 7-8】V_{COMAC} should be alternated on V_{COMDC} every 1 horizontal period and 1 vertical period. V_{COMDC} bias is adjusted so as to minimize flicker or maximum contrast every each module .

B) Back light driving section

Table 7 Ta=25℃

Parameter	Symbol	MIN	TYP	MAX	Units	Remarks terminal
LED voltage	V_L	－	32.4	36.0	V	
LED current	I_L	－	15	20	mA	
Power consumption	W_L	－	486	720	mW	【Note 7-9】

【Note 7-9】Calculated reference value(I_L×V_L)

7-2) Timing Characteristics of input signals

Table 8　AC Characteristics (1)　　(VSHA=+5V, VSHD=+3.3V, Ta=25℃)

Parameter		Symbol	Min.	Typ.	Max.	Unit	Remark
Clock frequency of source driver		fCK	4.5	－	6.8	MHz	DCLK
Source driver	Rising time of clock	Tcr	－	－	20	ns	
	Falling time of clock	Tcf	－	－	20	ns	
	Pulse width (High level)	Tcwh	40	－	－	ns	
	Pulse width (Low level)	Tcwl	40	－	－	ns	
	Frequency of start pulse	fsp	16.5	－	28	kHz	SPL,SPR 【Note 7-10】
	Setup time of start pulse	Tsusp	15	－	－	ns	
	Hold time of start pulse	Thsp	10	－	－	ns	
	Pulse width of start pulse	Twsp	－	－	1.5/fCK	ns	
	Setup time of latch pulse	Tsulp	20	－	－	ns	LP
	Hold time of latch pulse	Thlp	20	－	－	ns	
	Pulse width of latch pulse	Twlp	60	－	－	ns	
	Setup time of PS	Tsups	0	－	－	μs	PS
	Hold time of PS	Thps	0	－	－	μs	
Set up time of data		Tsud	15	－	－	ns	R0～R5,G0～G5 ,B0～B5
Hold time of data		Thd	10	－	－	ns	
Gate driver	Clock frequency	fcls	16.5	－	28	kHz	CLS
	Pulse width of clock(Low)	Twlcls	5	－	(1/fclk)-30	μs	
	Pulse width of clock(High)	Twhcls	30	－	－	μs	
	Rising time of clock	Trcls	－	－	100	ns	
	Falling time of clock	Tfcls	－	－	100	ns	
	Setup time of clock	Tsucls	3	－	－	μs	
	Hold time of clock	Thcls	0	－	－	μs	
	Frequency of start pulse	fsps	50	－	86	Hz	SPS
	Setup time of start pulse	Tsu	100	－	－	ns	
	Hold time of start pulse	Th	300	－	－	ns	
	Rising time of start pulse	Trsp	－	－	100	ns	
	Falling time of start pulse	Tfsp	－	－	100	ns	
Vcom	Setup time of Vcom	Tsuvcom	3	－	－	μs	Vcom
	Hold time of Vcom	Thvcom	1	－	－	μs	

【Note 7-10】There must be only one up-edge of DCLK (includes Tsusp and Thsp time) in the period of SPL="Hi".

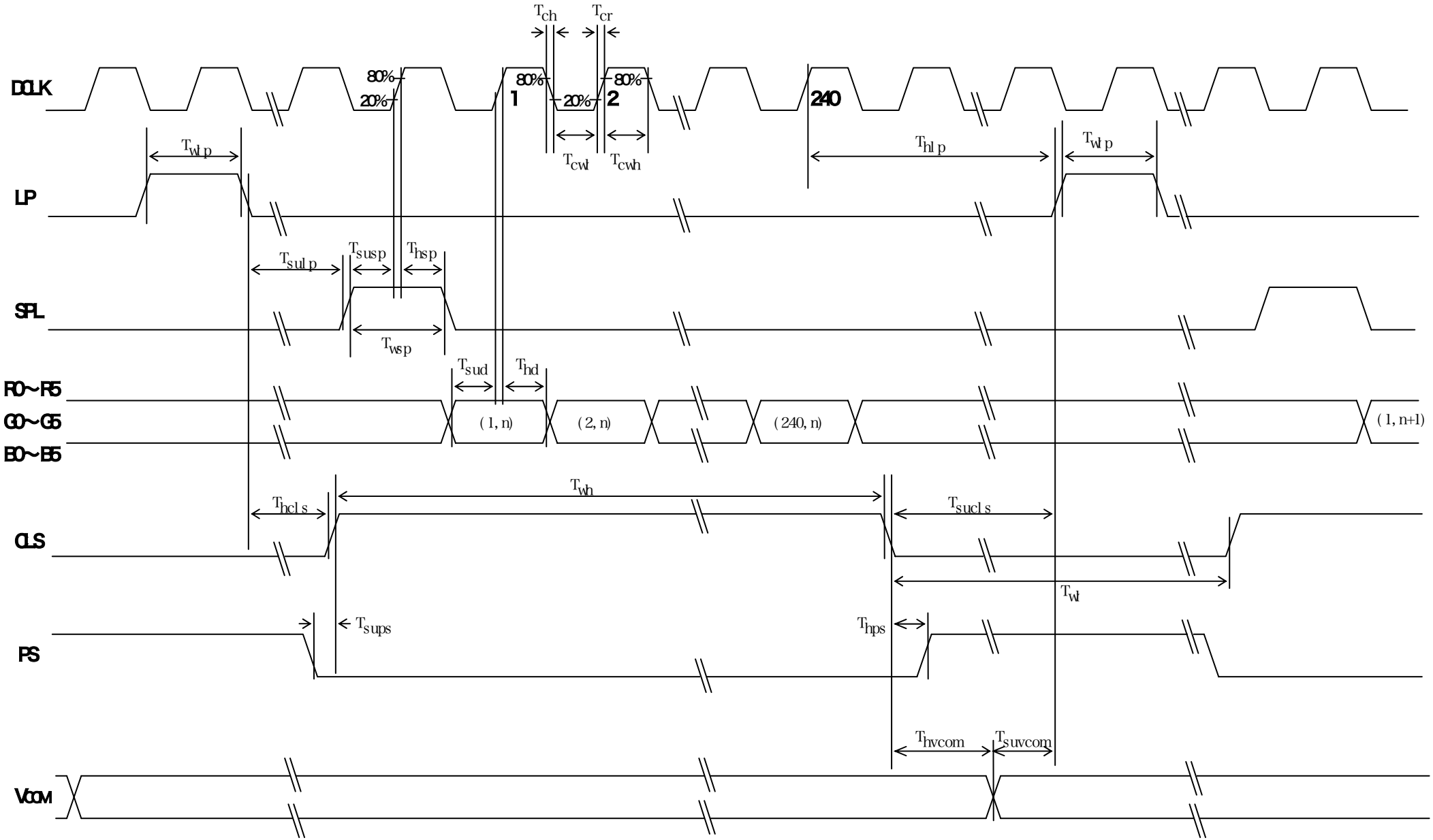

Fig.(a) Horizontal timing chart

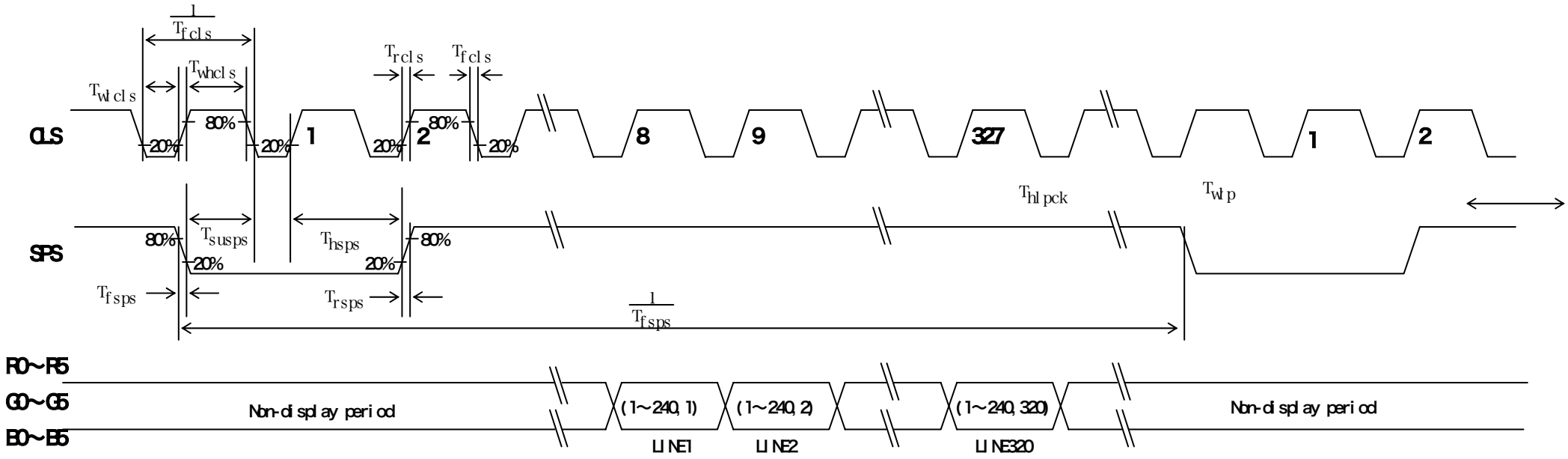

Fig.(b) Vertical timing chart

7-3)Power consumption

Measurement condition : SPS=60Hz,CLS=15.73kHz,SPL=15.73kHz,DCLK=6.3MHz

The term of PS="Lo" in one horizontal period … 37μsec(234DCLK)

Ta=25℃

Table 9 when normal scan mode

Parameter		Sym	Conditions	MIN	TYP	MAX	Unit	Remarks
Source current	Analog	I_{SHA}	V_{SHA}=+5.0V	–	5.0	10	mA	【Note 7-11】
	Digital	I_{SHD}	V_{SHD}=+3.3V	–	1.8	3.6	mA	【Note 7-11】
Gate current	High	I_{DD}	V_{DD}=+15.0V	–	0.05	0.10	mA	【Note 7-12】
	Low	I_{EE}	V_{EE}=－9.0±2.5V	–	－0.03	－0.06	mA	【Note 7-12】
	logic High	I_{CC}	V_{CC}=－11.7V	–	0.08	0.16	mA	【Note 7-12】
	logic Low	I_{SS}	V_{SS}=－15.0V	–	－0.18	－0.36	mA	【Note 7-12】
Power consumption		Pd1	【Note 7-14】	–	33	66	mW	【Note 7-11】
		Pd2		–	25	50	mW	【Note 7-13】

【Note 7-11】Vertical stripe pattern alternating 21 gray scale (GS21) with 42 gray scale (GS42) every 1 dot.

【Note 7-12】64-Gray-bar vertical pattern (GS0 ～ GS63 for horizontal way)

【Note 7-13】all black pattern (GS0)

【Note 7-14】Voltage conditions

V_{SHA}=+5.0V , V_{SHD}=+3.3V , V_{DD}=+15.0V

V_{EE}=－9.0±2.5V , V_{CC}=－11.7V , V_{SS}=－15.0V

8 .Input Signals, Basic Display Color and Gray Scale of Each Colornn

Table 10

	Colors & Gray scale	Data signal																		
		Gray Scale	R0	R1	R2	R3	R4	R5	G0	G1	G2	G3	G4	G5	B0	B1	B2	B3	B4	B5
Basic color	Black	－	0	0	0	0	0	0	0	0	0	0	0	0	0	0	0	0	0	0
	Blue	－	0	0	0	0	0	0	0	0	0	0	0	0	1	1	1	1	1	1
	Green	－	0	0	0	0	0	0	1	1	1	1	1	1	0	0	0	0	0	0
	Cyan	－	0	0	0	0	0	0	1	1	1	1	1	1	1	1	1	1	1	1
	Red	－	1	1	1	1	1	1	0	0	0	0	0	0	0	0	0	0	0	0
	Magenta	－	1	1	1	1	1	1	0	0	0	0	0	0	1	1	1	1	1	1
	Yellow	－	1	1	1	1	1	1	1	1	1	1	1	1	0	0	0	0	0	0
	White	－	1	1	1	1	1	1	1	1	1	1	1	1	1	1	1	1	1	1
Gray Scale of red	Black	GS0	0	0	0	0	0	0	0	0	0	0	0	0	0	0	0	0	0	0
	⇧	GS1	1	0	0	0	0	0	0	0	0	0	0	0	0	0	0	0	0	0
	Darker	GS2	0	1	0	0	0	0	0	0	0	0	0	0	0	0	0	0	0	0
	⇧	↓				↓						↓						↓		
	⇩	↓				↓						↓						↓		
	Brighter	GS61	1	0	1	1	1	1	0	0	0	0	0	0	0	0	0	0	0	0
	⇩	GS62	0	1	1	1	1	1	0	0	0	0	0	0	0	0	0	0	0	0
	Red	GS63	1	1	1	1	1	1	0	0	0	0	0	0	0	0	0	0	0	0
Gray Scale of green	Black	GS0	0	0	0	0	0	0	0	0	0	0	0	0	0	0	0	0	0	0
	⇧	GS1	0	0	0	0	0	0	1	0	0	0	0	0	0	0	0	0	0	0
	Darker	GS2	0	0	0	0	0	0	0	1	0	0	0	0	0	0	0	0	0	0
	⇧	↓				↓						↓						↓		
	⇩	↓				↓						↓						↓		
	Brighter	GS61	0	0	0	0	0	0	1	0	1	1	1	1	0	0	0	0	0	0
	⇩	GS62	0	0	0	0	0	0	0	1	1	1	1	1	0	0	0	0	0	0
	Green	GS63	0	0	0	0	0	0	1	1	1	1	1	1	0	0	0	0	0	0
Gray Scale of bleu	Black	GS0	0	0	0	0	0	0	0	0	0	0	0	0	0	0	0	0	0	0
	⇧	GS1	0	0	0	0	0	0	0	0	0	0	0	0	1	0	0	0	0	0
	Darker	GS2	0	0	0	0	0	0	0	0	0	0	0	0	0	1	0	0	0	0
	⇧	↓				↓						↓						↓		
	⇩	↓				↓						↓						↓		
	Brighter	GS61	0	0	0	0	0	0	0	0	0	0	0	0	1	0	1	1	1	1
	⇩	GS62	0	0	0	0	0	0	0	0	0	0	0	0	0	1	1	1	1	1
	Bleu	GS63	0	0	0	0	0	0	0	0	0	0	0	0	1	1	1	1	1	1

0 :Low level voltage　　1 :High level voltage

Each basic color can be displayed in 64 gray scales from 6 bit data signals. According to the combination of total 18 bit data signals, the 262,144-color display can be achieved on the screen.

(9)Optical characteristics

9-1)Not driving the Back light condition

Table 12 Ta=25°C

Parameter		Symbol	Condition	Min	Typ	Max	Unit	Remarks
Viewing angle Range		θ21,22	CR≥2	40	50	－	degree	[Note 9-1,2]
		θ11		40	50	－	degree	
		θ12		40	50	－	degree	
Contrast ratio		CRmax	θ =0°	4	8	－		[Note 9-2,5]
Response Time	Rise	τ r	θ =0°	－	30	60	ms	[Note 9-4]
	Fall	τ d		－	50	100	ms	
Color chromaticity		White - x	θ =0°	0.25	0.30	0.35		[Note 9-5]
		White - y		0.28	0.33	0.38		
		Red - x		0.34	0.39	0.44		
		Red - y		0.25	0.31	0.35		
		Green - x		0.25	0.30	0.35		
		Green - y		0.34	0.39	0.44		
		Blue - x		0.15	0.20	0.25		
		Blue - y		0.21	0.26	0.31		
Reflection ratio		R	θ =0°	7	11	－	%	[Note 9-5,6]

* The measuring method of the optical characteristics is shown by the following figure.

* A measurement device is Otsuka luminance meter LCD5200.(With the diffusion reflection unit.)

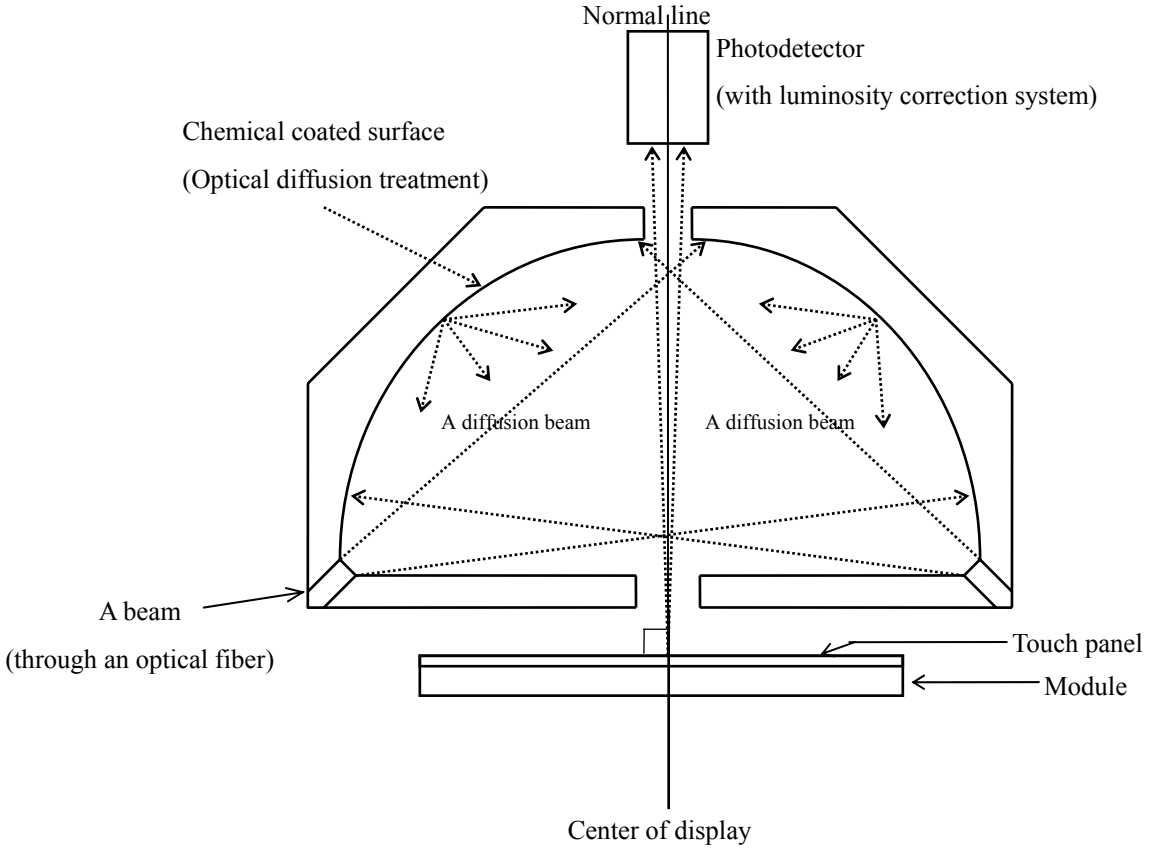

Measuring method (a) for optical characteristics

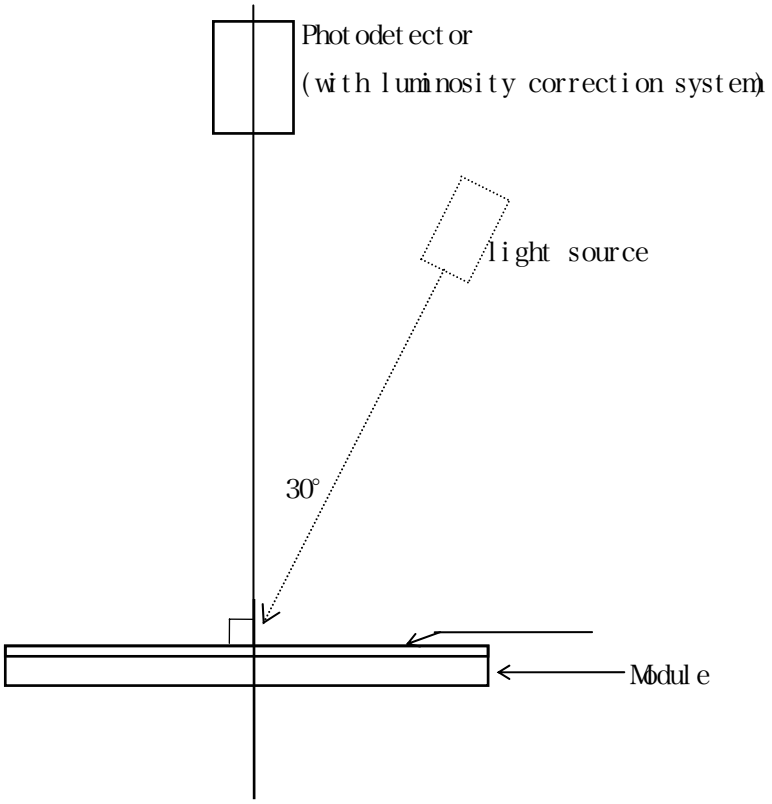

Measuring method (b) for optical characteristics

9-2)Driving the Back light condition

Table 13 Ta=25°C

Parameter		Symbol	Condition	Min	Typ	Max	Unit	Remarks
Viewing angle range		θ21,22	CR≥2	30	40	－	degree	[Note 9-1,2]
		θ11		30	40	－	degree	
		θ12		30	40	－	degree	
Contrast ratio		Crmax	θ = 0°	40	75	－		[Note 9-2]
Response time	Rise	τ r		－	30	60	ms	[Note 9-4]
	Fall	τ d		－	50	100	ms	
Color chromaticity		White - x	θ = 0°	0.25	0.30	0.35		
		White - y		0.27	0.32	0.37		
		Red - x		0.43	0.48	0.53		
		Red - y		0.27	0.32	0.37		
		Green - x		0.26	0.31	0.36		
		Green - y		0.38	0.43	0.48		
		Blue - x		0.11	0.16	0.21		
		Blue - y		0.15	0.20	0.25		
Brightness		Y	θ = 0°	75	90	－	cd/m^2	I_L=20mA
Lamp life time		LL	I_L=20mA	－	10000	－	hour	[Note 9-7]
Uniformity		－	－	75	85	－	%	[Note 9-8]

* The measuring method of the optical characteristics is shown by the following figure.

* A measurement device is TOPCON luminance meter BM-5(A).(Viewing cone 1)

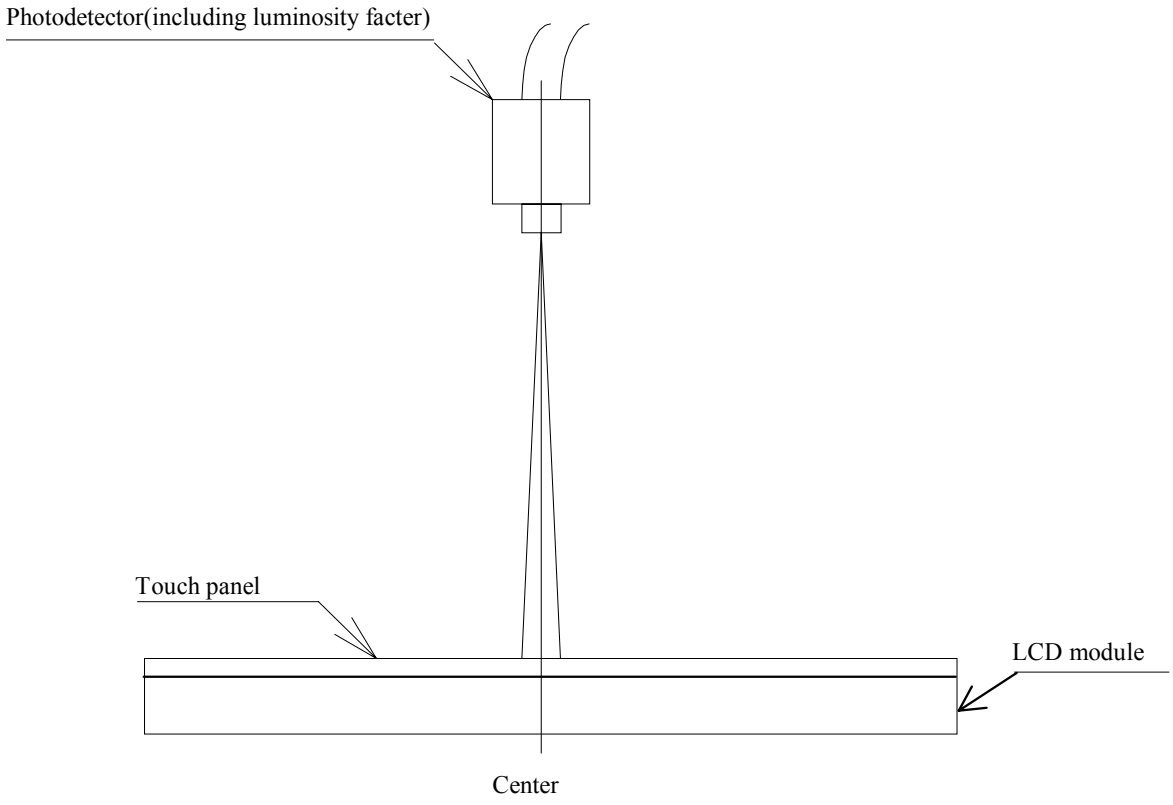

Measuring method (c) for optical characteristics

[Note 9-1] Viewing angle range is defined as follows.

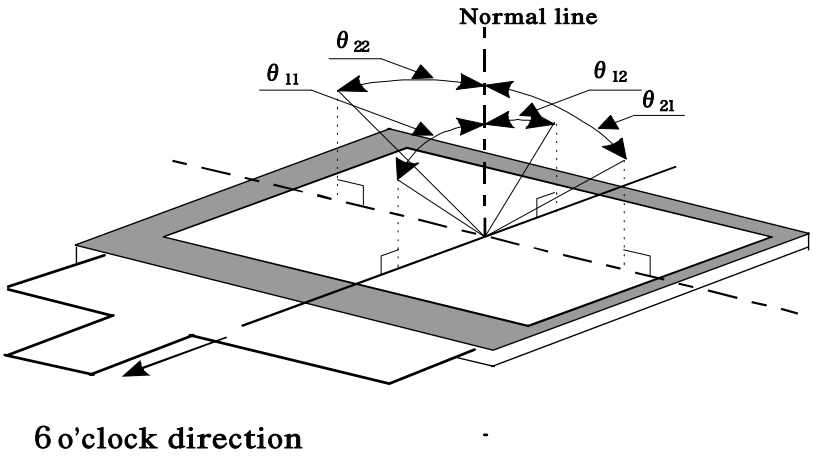

Definition for viewing angle

[Note 9-2] Definition of contrast ratio:

The contrast ratio is defined as follows:

$$\text{Contrast ratio(CR)} = \frac{\text{Photodetecter output with all pixels white(GS63)}}{\text{Photodetecter output with all pixels black(GS0)}}$$

VCOMAC=5.0Vp-p,V0=4.0Vp-p,V4=-4.0Vp-p

[Note 9-3] These values are under the condition of measuring method(b) with a point light source (lighting angle = 30°).

[Note 9-4] Definition of response time:

The response time is defined as the following figure and shall be measured by switching the input signal for "black" and "white".

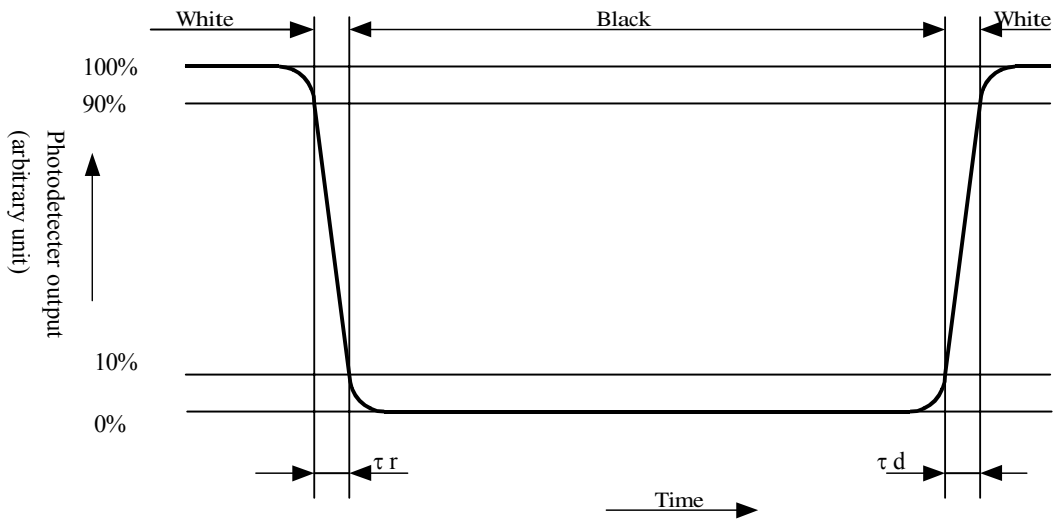

[Note 9-5] A measurement device is Minolta CM-2002.

[Note 9-6] Definition of reflection ratio

$$\text{Reflection ratio} = \frac{\text{Light detected level of the reflection by the LCD module}}{\text{Light detected level of the reflection by the standard white board}}$$

[Note 9-7] The White-LED life time is defined as a time when brightness not to become under 50% of the original value.(at Ta=25℃)

[Note 9-8] Definition of Uniformity

$$\text{Uniformity} = \frac{\text{Minimum brightness}}{\text{Maximum brightness}} \times 100\ (\%)$$

The brightness should be measured on 9spots of the display as follows.

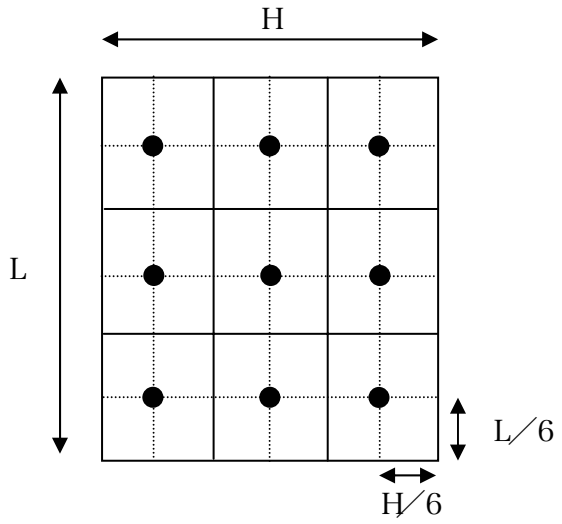

(10)Display quality

The display quality of the color TFT-LCD module shall be in compliance with the Incoming Inspection Standards for TFT-LCD..

(11)Mechanical characteristics

11-1) External appearance

See Fig. 1

11-2) FPC (for LCD panel) characteristics

(1) Specific connector

Hirose FH23-61S-0.3SHAW(05)

(2) Bending endurance of the bending slits portion

No line of the FPC is broken for the bending test (Bending radius=0.6mm and angle=90°) in 30 cycles.

(12)Handling Precautions

12-1) Insertion and taking out of FPCs

Be sure insert and take out of the FPC into the connector of the set after turning off the power supply on the set side.

12-2) Handling of FPCs

The FPC for LCD panel shall be bent only slit portion. The bending slit shall be bent uniformly on the whole slit portion with bending radius larger than 0.6mm ,and only inner side (back side of the module). Don't bend it outer side (display surface side).

Don't give the FPCs too large force, for example, hanging the module with holding FPC.

12-3) Installation of the module

On mounting the module, be sure to fix the module on the same plane. Taking care not to warp or twist the module.

12-4)Precaution when mounting

(1) If water droplets and oil attaches to it for a long time, discoloration and staining occurs. Wipe them off immediately.

(2) Glass is used for the TFT-LCD panel and touch panel. If it is dropped or bumped against a hard object, it may be broken. Handle it with sufficient care.

(3)As the CMOS IC is used in this module, pay attention to static electricity when handling it. Take a measure for grounding on the human body.

12-5)Others

(1) The liquid-crystal is deteriorated by ultraviolet rays. Do not leave it in direct sunlight and strong ultraviolet rays for many hours.

(2) If it is kept at a temperature below the rated storage temperature, it becomes coagulated and the panel may be broken. Also, if it is kept at a temperature above the rated storage temperature, it becomes isotropic liquid and does not return to its original state. Therefore, it is desirable to keep it at room temperature as much as possible.

(3) If the LCD breaks, don't put internal liquid crystal into the mouth. When the liquid crystal sticks to the hands, feet and clothes, wash it out immediately.

(4) Wipe off water drop or finger grease immediately. Long contact with water may cause discoloration or spots.

(5) Observe general precautions for all electronic components.

(6) VCOM must be adjusted on condition of your final product. No adjustment causes the deterioration for display quality.

(13)Reliability Test Conditions for TFT-LCD Module

Table 14

No.	Test items	Test conditions
1	High temperature storage test	Ta=+60℃ 240h
2	Low temperature storage test	Ta=－20℃ 240h
3	High temperature and high humidity operating test	Tp=+40℃ , 95%RH 240h (But no condensation of dew)
4	High temperature operating test	Tp=+50℃ 240h
5	Low temperature operating test	Tp=0℃ 240h
6	Electro static discharge test	±200V・200pF(0Ω) 1 time for each terminals
7	Shock tset	980 m/s^2, 6 ms ±X,±Y,±Z 3 times for each direction (JIS C0041, A-7 Condition C)
8	Vibration test	Frequency range: 10Hz～55Hz Stroke: 1.5 mm Sweep: 10Hz～55Hz X,Y,Z 2 hours for each direction (total 6 hours) (JIS C0040,A-10 Condition A)
9	Heat shock test	Ta=-25℃～+70℃ / 5 cycles (1h) (1h)

【Note】Ta = Ambient temperature, Tp = Panel temperature

【Check items】In the standard condition, there shall be no practical problems that may affect the display function.

(14) Others

14-1)Indication of lot number

The lot number is shown on a label. Attached location is shown in Fig.1 (Outline Dimensions).

Indicated contents of the label

LQ038Q7DB03R	○○○○○○○○
model No.	lot No.

14-2) Used Regulation of Chemical Substances Breaking Ozone Stratum

Substances with the object of regulating : CFCS, Carbon tetrachloride, Halon
1,1,1-Trichloro ethane (Methyl chloroform)

(a) This LCD module, Constructed part and Parts don't contain the above substances.

(b) This LCD module, Constructed part and Parts don't contain the above substances in processes of manufacture.

14-3) If some problems arise about mentioned items in this document and other items, the user of the TFT-LCD module and Sharp will cooperate and make efforts to solve the problems with mutual respect and good will.

SHARP

Unit is mm

CONFIDENTIAL

TENTATIVE

NOTE.
This drawing still tentative.
because we are under development.
There may be changes of this
drawing in future.

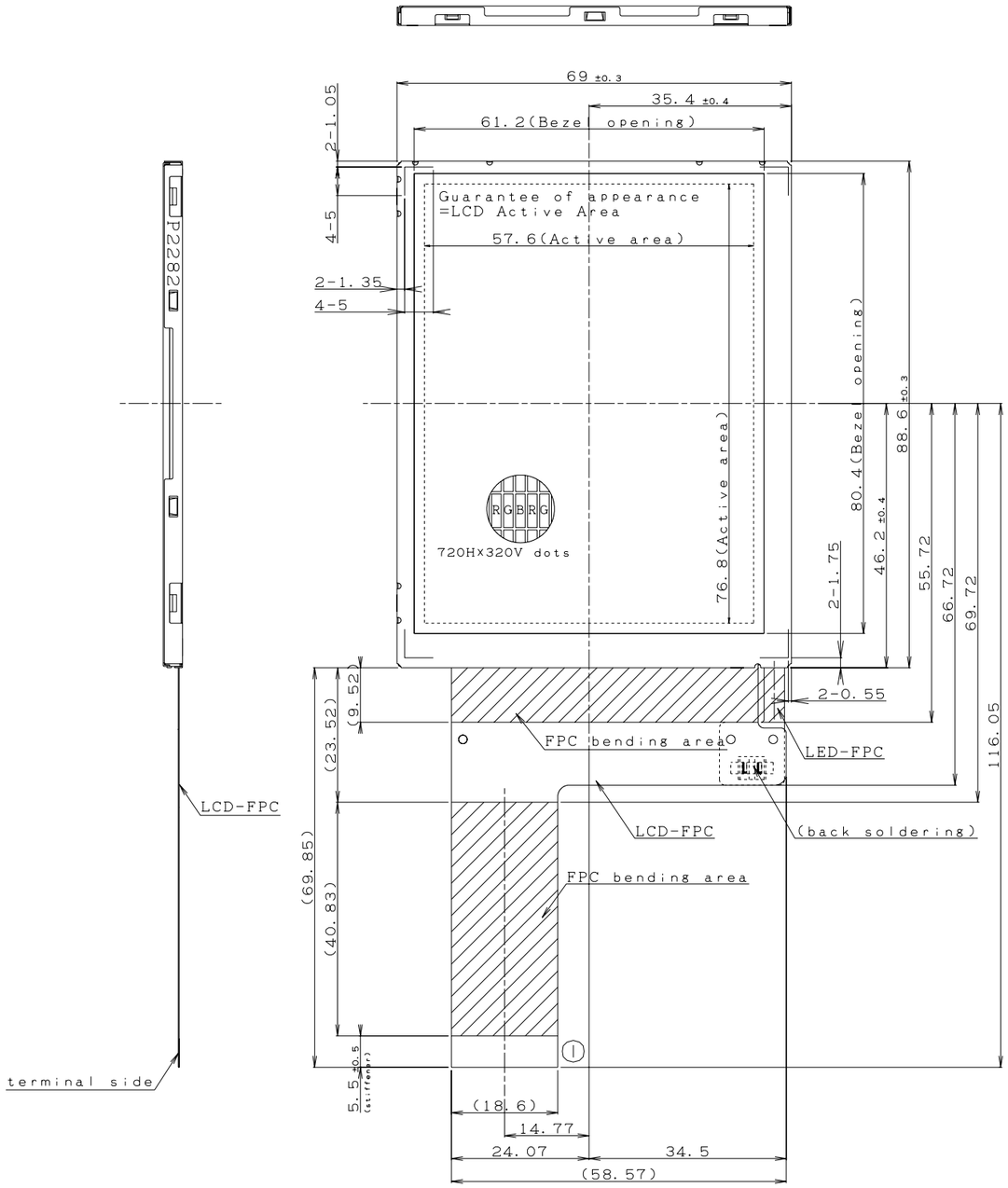

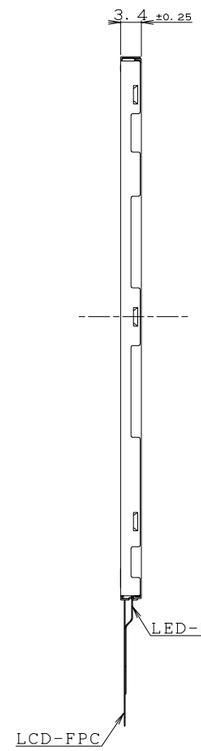

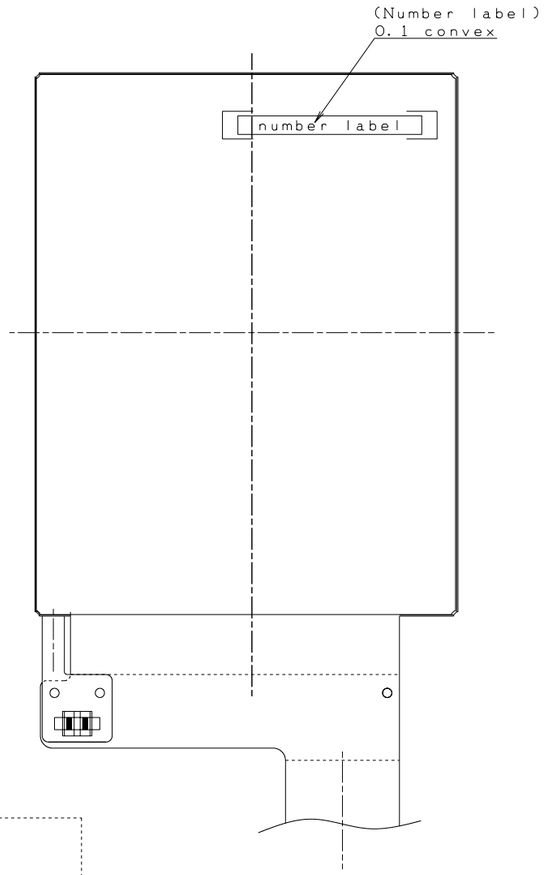

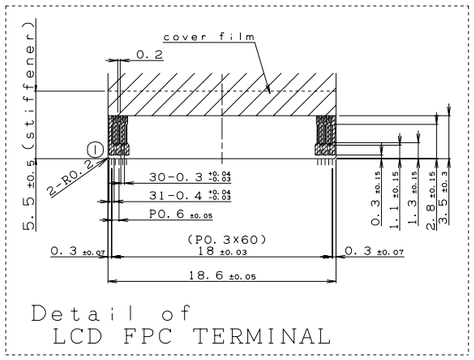

Fitting CN:Hirose FH23-61S-0.3SHAW(05)

- General tolerance is ±0.5
- LCD-FPC should bended only bending area.
- LCD/LED-FPC bend larger than 0.6 in radius.
- Take care in set design to hide the scratches and bubbles appeared on the polarizer or other frame area which is located outside of guarantee area.
- The tolerance of module width are exclude warp of case.
- The thickness of the soldering part is maximum 1mm.

5				
4				
3				
2				
1	**	**		**
改訂日		改訂記事 REVISION		担当

設計 DESIGNER	製図 DRAFTER	検図 DSN CK	検図 DSN CK	承認 ENG APPD

シャープ株式会社
MB液晶事業本部第1設計C第5開発部
SHARP CORPORATION

ORIGINAL MODEL	LQ038Q7DB03R
画面サイズ ACTIVE AREA SIZE	96mm(3.8") 0.24mm 240RGBX320
尺度 SCALE 1/1	日付 DATE 18. MAY. 2005
単位 Unit mm	名称 NAME Outline Dimensions
	ユーザー USER
原紙サイズ A3	図番 DRAWING NO LDM-03168A

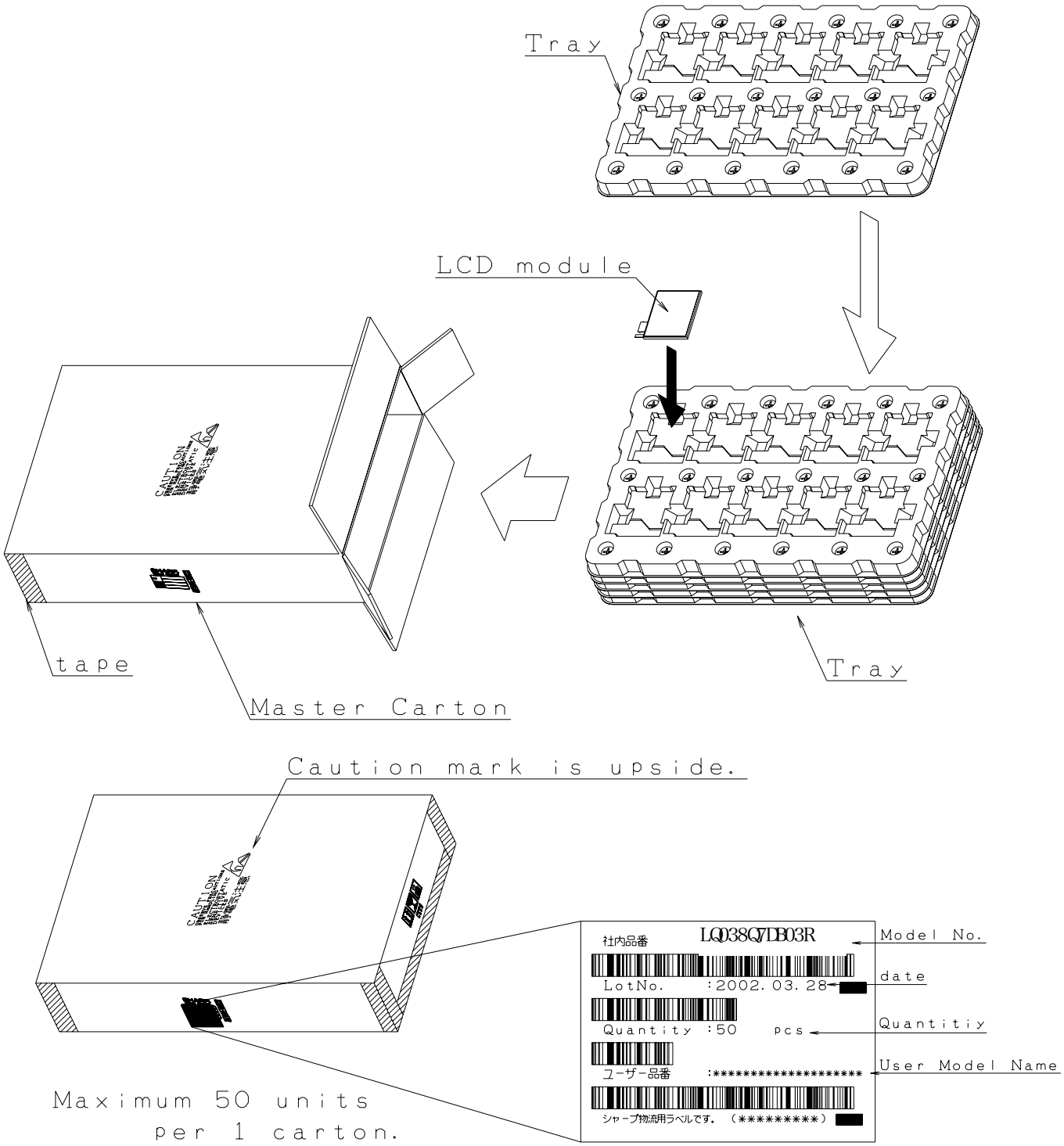
Tray
LCD module
tape
Master Carton
Tray
Caution mark is upside.
社内品番
LQ038Q7DB03R
Model No.
LotNo. :2002.03.28
date
Quantity :50 pcs
Quantitiy
ユーザー品番 :**********
User Model Name
シャープ物流用ラベルです。（*********）
Maximum 50 units
per 1 carton.

SPECIFICATIONS ARE SUBJECT TO CHANGE WITHOUT NOTICE.

Suggested applications (if any) are for standard use; See Important Restrictions for limitations on special applications. See Limited Warranty for SHARP's product warranty. The Limited Warranty is in lieu, and exclusive of, all other warranties, express or implied. ALL EXPRESS AND IMPLIED WARRANTIES, INCLUDING THE WARRANTIES OF MERCHANTABILITY, FITNESS FOR USE AND FITNESS FOR A PARTICULAR PURPOSE, ARE SPECIFICALLY EXCLUDED. In no event will SHARP be liable, or in any way responsible, for any incidental or consequential economic or property damage.

SHARP®

NORTH AMERICA

SHARP Microelectronics of the Americas
5700 NW Pacific Rim Blvd.
Camas, WA 98607, U.S.A.
Phone: (1) 360-834-2500
Fax: (1) 360-834-8903
Fast Info: (1) 800-833-9437
www.sharpsma.com

EUROPE

SHARP Microelectronics Europe
Division of Sharp Electronics (Europe) GmbH
Sonninstrasse 3
20097 Hamburg, Germany
Phone: (49) 40-2376-2286
Fax: (49) 40-2376-2232
www.sharpsme.com

JAPAN

SHARP Corporation
Electronic Components & Devices
22-22 Nagaike-cho, Abeno-Ku
Osaka 545-8522, Japan
Phone: (81) 6-6621-1221
Fax: (81) 6117-725300/6117-725301
www.sharp-world.com

TAIWAN

SHARP Electronic Components
(Taiwan) Corporation
8F-A, No. 16, Sec. 4, Nanking E. Rd.
Taipei, Taiwan, Republic of China
Phone: (886) 2-2577-7341
Fax: (886) 2-2577-7326/2-2577-7328

SINGAPORE

SHARP Electronics (Singapore) PTE., Ltd.
438A, Alexandra Road, #05-01/02
Alexandra Technopark,
Singapore 119967
Phone: (65) 271-3566
Fax: (65) 271-3855

KOREA

SHARP Electronic Components
(Korea) Corporation
RM 501 Geosung B/D, 541
Dohwa-dong, Mapo-ku
Seoul 121-701, Korea
Phone: (82) 2-711-5813 ~ 8
Fax: (82) 2-711-5819

CHINA

SHARP Microelectronics of China
(Shanghai) Co., Ltd.
28 Xin Jin Qiao Road King Tower 16F
Pudong Shanghai, 201206 P.R. China
Phone: (86) 21-5854-7710/21-5834-6056
Fax: (86) 21-5854-4340/21-5834-6057
Head Office:
No. 360, Bashen Road,
Xin Development Bldg. 22
Waigaoqiao Free Trade Zone Shanghai
200131 P.R. China
Email: smc@china.global.sharp.co.jp

HONG KONG

SHARP-ROXY (Hong Kong) Ltd.
3rd Business Division,
17/F, Admiralty Centre, Tower 1
18 Harcourt Road, Hong Kong
Phone: (852) 28229311
Fax: (852) 28660779
www.sharp.com.hk
Shenzhen Representative Office:
Room 13B1, Tower C,
Electronics Science & Technology Building
Shen Nan Zhong Road
Shenzhen, P.R. China
Phone: (86) 755-3273731
Fax: (86) 755-3273735