PREPARED BY : DATE	SHARP	SPEC No. LD-14123
APPROVED BY : DATE		FILE No.
		ISSUE : Jan. 25. 2002
	AVC LIQUID CRYSTAL DISPLAY GROUP SHARP CORPORATION	PAGE : 17 pages
	SPECIFICATION	APPLICABLE GROUP AVC LIQUID CRYSTAL DISPLAY GROUP

DEVICE SPECIFICATION FOR

TFT-LCD Module

MODEL No.

LQ150X1LH62

☐ CUSTOMER'S APPROVAL

DATE _____

BY _____

PRESENTED

BY Makoto Takeda

M. TAKEDA
Department General Manager
Development Engineering Department II
AVC Liquid Crystal Display Division
AVC LIQUID CRYSTAL DISPLAY GROUP
SHARP CORPORATION

RECORDS OF REVISION

LQ150X1LH62

SPEC No.	DATE	REVISED No.	PAGE	SUMMARY	NOTE
LD-14123	Jan.25.2002	-	-		1st Issue

The device listed in these specification sheets was designed and manufactured for use in OA equipment.

In case of using the device for applications such as control and safety equipment for transportation(aircraft, trains, automobiles, etc.), rescue and security equipment and various safety related equipment which require higher reliability and safety, take into consideration that appropriate measures such as fail-safe functions and redundant system design should be taken.

Do not use the device for equipment that requires an extreme level of reliability, such as aerospace applications, telecommunication equipment(trunk lines), nuclear power control equipment and medical or other equipment for life support.

SHARP assumes no responsibility for any damage resulting from the use of the device which does not comply with the instructions and the precautions specified in these technical literature sheets.

Contact and consult with a SHARP sales representative for any questions about this device.

1. Application

This specification applies to a color TFT-LCD module, LQ150X1LH62.

2. Overview

This module is a color active matrix LCD module incorporating amorphous silicon TFT (Thin Film Transistor). It is composed of a color TFT-LCD panel, driver ICs, control circuit and power supply circuit and a backlight unit. Graphics and texts can be displayed on a 1024×3×768 dots panel with 262,144 colors by using LVDS (Low Voltage Differential Signaling) to interface and supplying +3.3V DC supply voltage for TFT-LCD panel driving and supply voltage for backlight.

The TFT-LCD panel used for this module has very high aperture ratio. A low-reflection and higher-color-saturation type color filter is also used for this panel. Therefore, high-brightness and high-contrast image, which is suitable for the multimedia use, can be obtained by using this module.

Optimum viewing direction is 6 o'clock.

Backlight-driving DC/AC inverter is not built in this module.

[Features]

1) High aperture panel ; high-brightness or low power consumption.
2) Brilliant and high contrast image.
3) Small footprint and thin shape.
4) Light weight.

3. Mechanical Specifications

Parameter	Specifications	Unit
Display size	38 (15.0") Diagonal	cm
Active area	304.1 (H)×228.1 (V)	mm
Pixel format	1024 (H)×768 (V)	pixel
	(1 pixel = R+G+B dots)	
Pixel pitch	0.297 (H) × 0.297 (V)	mm
Pixel configuration	R,G,B vertical stripe	
Display mode	Normally white	
Unit outline dimensions (typ.)*1	315.8(W)×240.5 (H)×7.0 Max.(D)	mm
Mass	670 Max.	g
Surface treatment	Anti-glare and hard-coating 2H	

*1.Note : excluding backlight cables.

Outline dimensions is shown in Fig.1

4. Input Terminals

4-1. TFT-LCD panel driving

CN1 (LVDS signals and +3.3V DC power supply)

Using connector：FI-SEB20P-HF10 (JAE)

Corresponding connector：FI-SE20M or FI-S20S (JAE)

Pin No.	Symbol	Function	Remark
1	Ｖｃｃ	+3.3V power supply	
2	Ｖｃｃ	+3.3V power supply	
3	ＧＮＤ		
4	ＧＮＤ		
5	RxIN0−	Receiver signal (-)	ＬＶＤＳ
6	RxIN0+	Receiver signal (+)	ＬＶＤＳ
7	ＧＮＤ		
8	RxIN1−	Receiver signal (-)	ＬＶＤＳ
9	RxIN1+	Receiver signal (+)	ＬＶＤＳ
１０	ＧＮＤ		
１１	RxIN2−	Receiver signal (-)	ＬＶＤＳ
１２	RxIN2+	Receiver signal (+)	ＬＶＤＳ
１３	ＧＮＤ		
１４	CK IN−	Clock signal (-)	ＬＶＤＳ
１５	CK IN+	Clock signal (+)	ＬＶＤＳ
１６	ＧＮＤ		
１７	RESERVED	This should be electrically opened during operation.	
１８	RESERVED	This should be electrically opened during operation.	
１９	ＧＮＤ		
２０	ＧＮＤ		

【Note 1】Relation between LVDS signals and actual data shows below section (4-2).

【Note 2】The shielding case is connected with signal GND.

4-2 Interface block diagram

Using receiver：Single LVDS interface contained in a control IC

Corresponding Transmitter：DS90C363,DS90C383, DS90C363A,DS90C383A (National semiconductor) THC63LVDM63A, THC63LVDF63A(Thine)

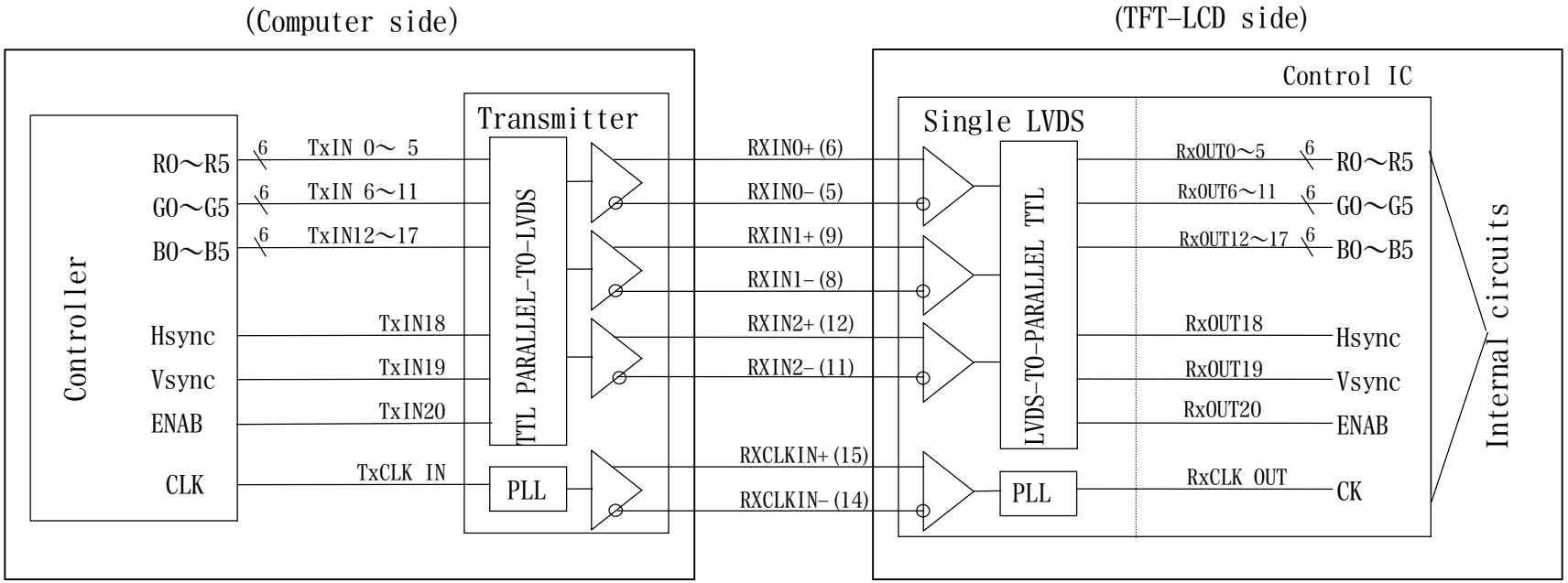

4-3. Backlight driving

CN2 : BHSR-02VS-1(JST)

Mating connector : SM02B-BHSS-1(JST)

Pin no.	symbol	function
1	V_{HIGH}	Power supply for lamp (High voltage side)
2	V_{LOW}	Power supply for lamp (Low voltage side)

5. Absolute Maximum Ratings

Parameter	Symbol	Condition	Ratings	Unit	Remark
Input voltage	V_I	Ta=25℃	−0.3 ～ Vcc+0.3	V	【Note1】
+3.3V supply voltage	Vcc	Ta=25℃	0 ～ ＋ 4	V	
Storage temperature	Tstg	−	−25 ～ ＋60	℃	【Note2】
Operating temperature (Ambient)	Topa	−	0 ～ ＋50	℃	

【Note1】LVDS signals

【Note2】Humidity：95%RH Max. at Ta≦40℃.

Maximum wet-bulb temperature at 39℃ or less at Ta>40℃.

No condensation.

6. Electrical Characteristics

6-1.TFT-LCD panel driving Ta＝25℃

Parameter			Symbol	Min.	Typ.	Max.	Unit	Remark
Vcc	Supply voltage		Vcc	+3.0	+3.3	+3.6	V	【Note2】
	Current dissipation		Icc	−	350	520	mA	【Note3】
Permissive input ripple voltage			V_{RP}	−	−	100	mV p-p	Vcc=+3.3V
Input voltage range			V_I	0	−	2.4	V	LVDS signal
Differential input threshold voltage		High	V_{TH}	−	−	+100	mV	V_{CM}=+1.2V 【Note1】
		Low	V_{TL}	−100	−	−	mV	
Input current (High)			I_{OH}	−	−	±10	μA	V_I=2.4V Vcc=3.6V
Input current (Low)			I_{OL}	−	−	±10	μA	V_I=0V Vcc=3.6V
Terminal resistor			R_T	−	100	−	Ω	Differential input

【Note1】 V_{CM} : Common mode voltage of LVDS driver.

【Note2】

On-off conditions for supply voltage

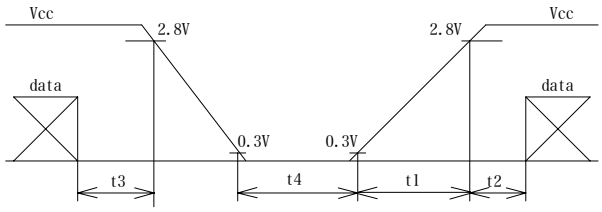

0＜t1≦10 ms

0＜t2≦100 ms

0＜t3≦1 s

t4＞200ms

Vcc-dip conditions

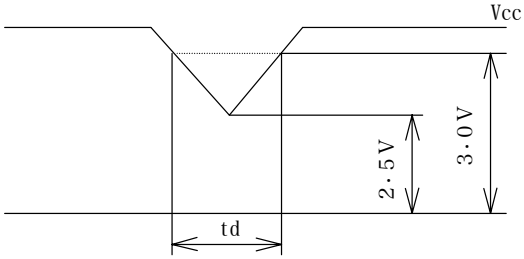

1) 2.5 V≦Vcc＜3.0 V
   td≦10 ms
2) Vcc＜2.5 V

Vcc-dip conditions should also follow the On-off conditions for supply voltage

【Note3】 Typical current situation : 16-gray-bar pattern.
Vcc=+3.3V

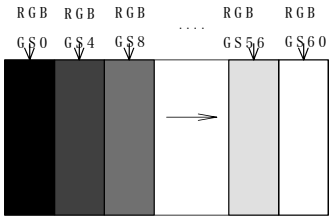

6-2. Backlight driving

The backlight system is an edge-lighting type with single CCFT (Cold Cathode Fluorescent Tube).
The characteristics of the lamp are shown in the following table.

Parameter	Symbol	Min.	Typ.	Max.	Unit	Remark	
Lamp current range	I_L	3.0	6.0	6.5	mArms	【Note1】	
Lamp voltage	V_L	—	660	—	Vrms		
Lamp power consumption	P_L	—	4.0	—	W	【Note2】	
Lamp frequency	F_L	40	52	70	KHz	【Note3】	
Kick-off voltage	V_S	—	—	1500	Vrms	Ta=25°C	【Note4】
		—	—	1600	Vrms	Ta=0°C	
Lamp life time	L_L	10000	—	—	Hour	【Note5】	

【Note1】 Lamp current is measured with current meter for high frequency as shown below.

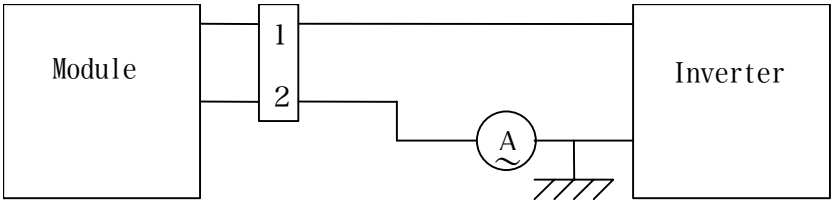

＊ 2pin is V_{LOW}

【Note2】 Calculated value for reference (I_L × V_L)

【Note3】 Lamp frequency may produce interference with horizontal synchronous frequency, and this may cause beat on the display. Therefore lamp frequency shall be detached as much as possible from the horizontal synchronous frequency and from the harmonics of horizontal synchronous to avoid interference.

【Note4】 It is defined at 22pF for the ballast capacitor of a DC/AC inverter.
The voltage above this value should be applied to the lamp for more than 1 second to start-up. Otherwise the lamp may not be turned on.

【Note5】 Lamp life time is defined as the time when either ① or ② occurs in the continuous operation under the condition of Ta = 25℃ and I_L = 6.0 mArms.

① Brightness becomes 50 % of the original value under standard condition.

② Kick-off voltage at Ta = 0℃ exceeds maximum value, 1600 V rms.

Note) The performance of the backlight, for example life time or brightness, is much influenced by the characteristics of the DC-AC inverter for the lamp. When you design or order the inverter, please make sure that a poor lighting caused by the mismatch of the backlight and the inverter (miss-lighting, flicker, etc.) never occur. When you confirm it, the module should be operated in the same condition as it is installed in your instrument.

7. Timing characteristics of input signals

7-1. Timing characteristics

(This is specified at digital outputs of LVDS driver.)

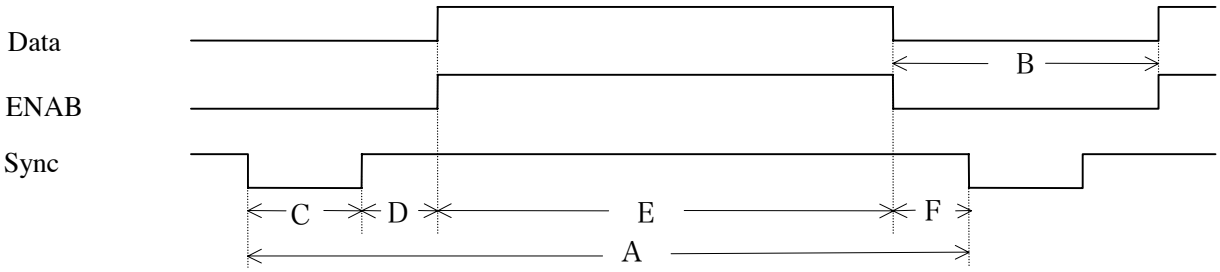

(Vertical)

Item (symbol)	Min.	Typ.	Max.	Unit	Remark
Vsync cycle (T_{VA})	—	16.667	—	ms	Negative
	803	806		line	
Blanking period(T_{VB})	35	38	—	line	
Sync pulse width (T_{VC})	4	6	—	line	
Back porch (T_{VD})	0	29		line	
Sync pulse width + Back porch (T_{VC}+T_{VD})	35	35	35	line	
Active display area (T_{VE})	768	768	768	line	
Front porch (T_{VF})	0	3	—	line	

(Horizontal)

Item (symbol)	Min.	Typ.	Max.	Unit	Remark
Hsync cycle (T_{HA})	19.2	20.677	—	μs	Negative
	1260	1344	1408	clock	
Blanking period (T_{HB})	236	320	—	clock	
Sync pulse width (T_{HC})	8	136	—	clock	
Sync pulse width + Back porch (T_{HC}+T_{HD})	1500-T_{HA}	296	T_{HA}-1024	clock	
Active display area (T_{HE})	1024	1024	1024	clock	
Front porch (T_{HF})	8	12	—	clock	

(Clock)

Item	Min.	Typ.	Max.	Unit	Remark
Frequency	50.0	65.0	65.0	MHz	【Note1】

Note) In case of lower frequency, the deterioration of display quality, flicker etc., may be occurred.

(Hsync-Vsync Phase difference)

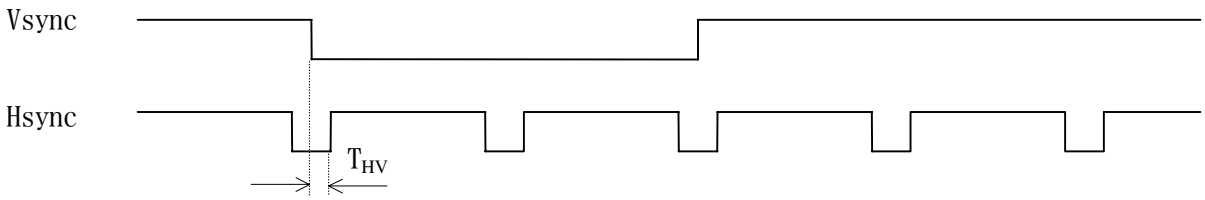

Item(symbol)	Min.	Typ.	Max.	Unit	Remark
Hsync-Vsync Phase difference (T_{HV})	1	—	T_{HA}−T_{HC}	clock	

(Hsync-ENAB Phase difference)

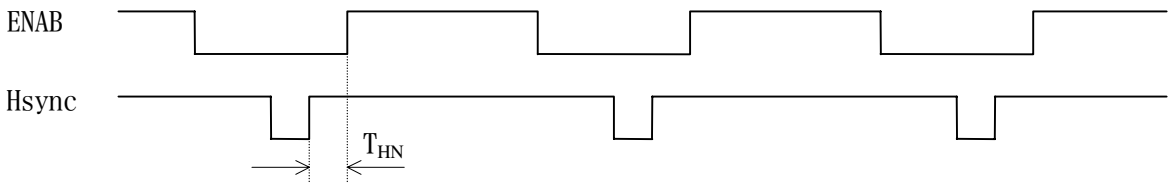

Item	Min.	Typ.	Max.	Unit	Remark
Hsync-ENAB Phase difference (T_{HN})	0	—	312	clock	

7-2 Display position

Item	Standards	Beginning	Ending	Unit	Remark
Horizontal	rising edge of ENAB	0	1024	clock	
	rising edge of Hsync	296	1320	clock	【Note1】
Vertical	falling edge of Vsync	35	803	line	

【Note1】 ENAB signal must be fixed to low.

［Note］

(Horizontal display direction)

When ENAB is fixed low, 296 clock are counted from Hsync positive edge and data from after are available . If you need other timing, please use ENAB signal.

(Vertical display direction)

35 lines are counted from Vsync negative edge and data from next line are available.

(Note of ENAB signal)

ENAB could not be used for the purpose of the vertical display start timing.

7-3. Input Data Signals and Display Position on the screen

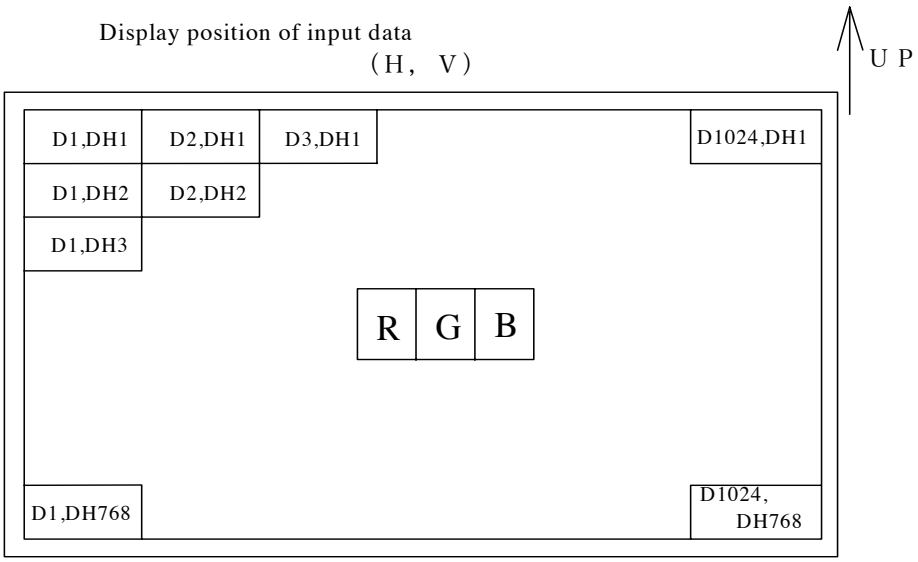

8. Input Signals, Basic Display Colors and Gray Scale of Each Color

	Colors & Gray scale	Data signal																		
		Gray Scale	R0	R1	R2	R3	R4	R5	G0	G1	G2	G3	G4	G5	B0	B1	B2	B3	B4	B5
Basic Color	Black	—	0	0	0	0	0	0	0	0	0	0	0	0	0	0	0	0	0	0
	Blue	—	0	0	0	0	0	0	0	0	0	0	0	0	1	1	1	1	1	1
	Green	—	0	0	0	0	0	0	1	1	1	1	1	1	0	0	0	0	0	0
	Cyan	—	0	0	0	0	0	0	1	1	1	1	1	1	1	1	1	1	1	1
	Red	—	1	1	1	1	1	1	0	0	0	0	0	0	0	0	0	0	0	0
	Magenta	—	1	1	1	1	1	1	0	0	0	0	0	0	1	1	1	1	1	1
	Yellow	—	1	1	1	1	1	1	1	1	1	1	1	1	0	0	0	0	0	0
	White	—	1	1	1	1	1	1	1	1	1	1	1	1	1	1	1	1	1	1
Gray Scale of Red	Black	GS0	0	0	0	0	0	0	0	0	0	0	0	0	0	0	0	0	0	0
	⇧	GS1	1	0	0	0	0	0	0	0	0	0	0	0	0	0	0	0	0	0
	Darker	GS2	0	1	0	0	0	0	0	0	0	0	0	0	0	0	0	0	0	0
	⇧	↓				↓						↓						↓		
	⇩	↓				↓						↓						↓		
	Brighter	GS61	1	0	1	1	1	1	0	0	0	0	0	0	0	0	0	0	0	0
	⇩	GS62	0	1	1	1	1	1	0	0	0	0	0	0	0	0	0	0	0	0
	Red	GS63	1	1	1	1	1	1	0	0	0	0	0	0	0	0	0	0	0	0
Gray Scale of Green	Black	GS0	0	0	0	0	0	0	0	0	0	0	0	0	0	0	0	0	0	0
	⇧	GS1	0	0	0	0	0	0	1	0	0	0	0	0	0	0	0	0	0	0
	Darker	GS2	0	0	0	0	0	0	0	1	0	0	0	0	0	0	0	0	0	0
	⇧	↓				↓						↓						↓		
	⇩	↓				↓						↓						↓		
	Brighter	GS61	0	0	0	0	0	0	1	0	1	1	1	1	0	0	0	0	0	0
	⇩	GS62	0	0	0	0	0	0	0	1	1	1	1	1	0	0	0	0	0	0
	Green	GS63	0	0	0	0	0	0	1	1	1	1	1	1	0	0	0	0	0	0
Gray Scale of Blue	Black	GS0	0	0	0	0	0	0	0	0	0	0	0	0	0	0	0	0	0	0
	⇧	GS1	0	0	0	0	0	0	0	0	0	0	0	0	1	0	0	0	0	0
	Darker	GS2	0	0	0	0	0	0	0	0	0	0	0	0	0	1	0	0	0	0
	⇧	↓				↓						↓						↓		
	⇩	↓				↓						↓						↓		
	Brighter	GS61	0	0	0	0	0	0	0	0	0	0	0	0	1	0	1	1	1	1
	⇩	GS62	0	0	0	0	0	0	0	0	0	0	0	0	0	1	1	1	1	1
	Blue	GS63	0	0	0	0	0	0	0	0	0	0	0	0	1	1	1	1	1	1

0 : Low level voltage, 1 : High level voltage

Each basic color can be displayed in 64 gray scales from 6 bit data signals. According to the combination of total 18 bit data signals, the 262,144-color display can be achieved on the screen.

9. Optical Characteristics

Ta=25℃, Vcc=+3.3V

Parameter		Symbol	Condition	Min.	Typ.	Max.	Unit	Remark
Viewing angle range	Horizontal	θ21, θ22	CR>10	45	—	—	Deg.	【Note1,4】
	Vertical	θ11		10	—	—	Deg.	
		θ12		30	—	—	Deg.	
Contrast ratio		CRn	θ=0°	150	—	—		【Note2,4】
		CRo	Optimum viewing angle	—	300	—		
Response time	Rise	τr	θ=0°	—	15		ms	【Note3,4】
	Decay	τd		—	30		ms	
Chromaticity of white		x		—	0.313	—		【Note4】
		y		—	0.329	—		
Luminance of white 【Note4】		Y_L		120	150	—	cd/m²	I_L=6.0mArms F_L=52kHz
White Uniformity		δ_W		—	—	1.45		【Note5】

※ The measurement shall be executed 30 minutes after lighting at rating. (condition : I_L=6.0mArms)

The optical characteristics shall be measured in a dark room or equivalent state with the method shown in Fig.2 below.

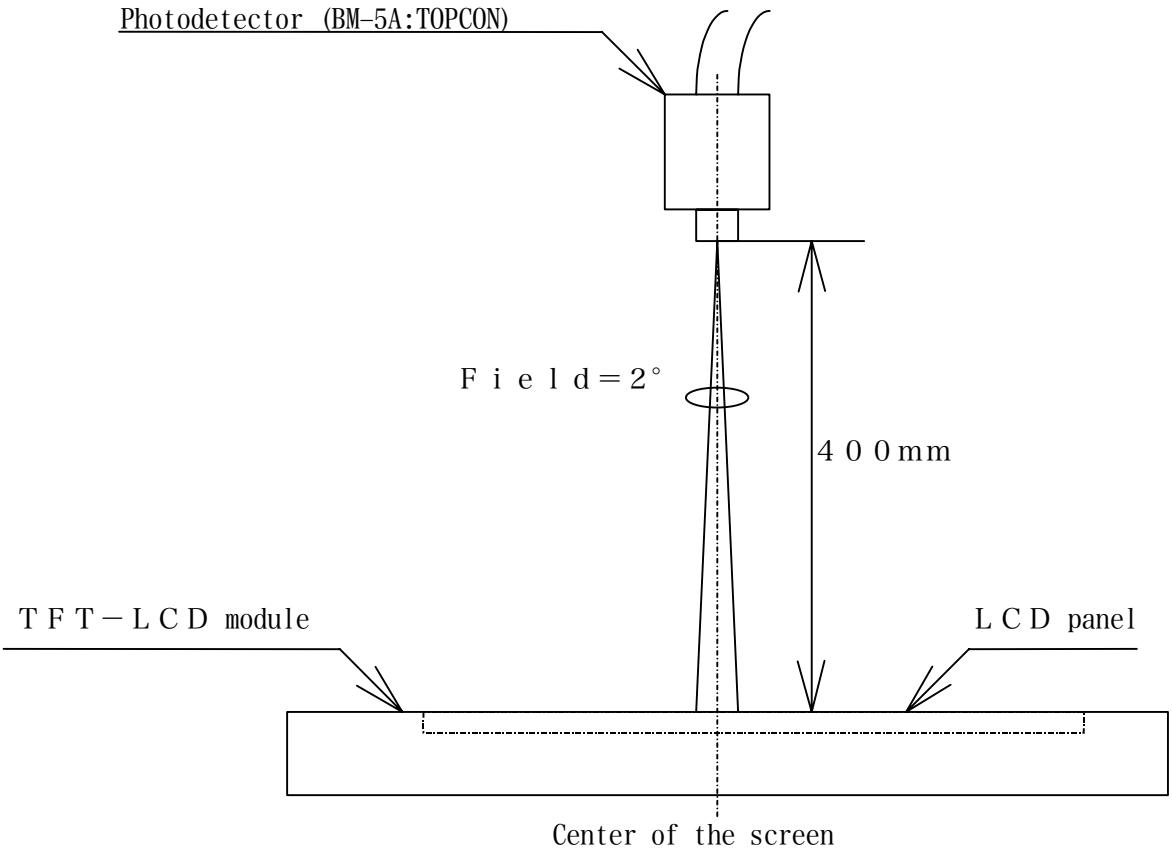

Fig.2 Optical characteristics measurement method

【Note1】Definitions of viewing angle range:

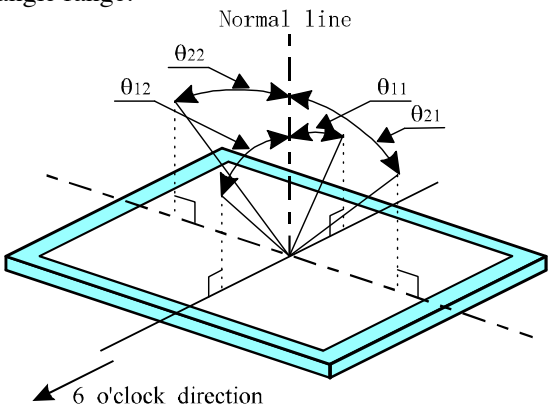

【Note2】Definition of contrast ratio:

The contrast ratio is defined as the following.

$$\text{Contrast Ratio (CR)} = \frac{\text{Luminance (brightness) with all pixels white}}{\text{Luminance (brightness) with all pixels black}}$$

【Note3】Definition of response time:

The response time is defined as the following figure and shall be measured by switching the input signal for "black" and "white" .

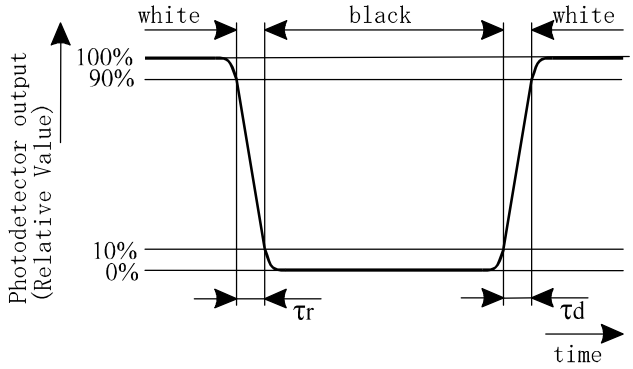

【Note4】This shall be measured at center of the screen.

【Note5】Definition of white uniformity:

White uniformity is defined as the following with five measurements (A～E).

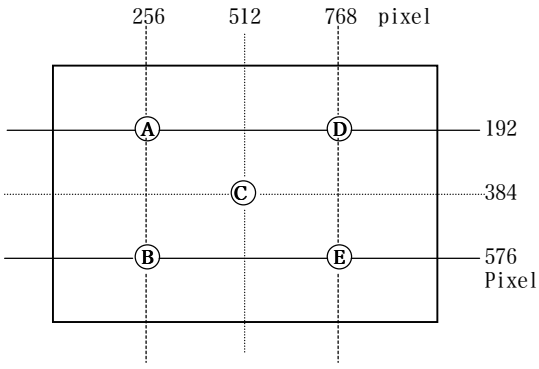

$$\delta w = \frac{\text{Maximum Luminance of five points (brightness)}}{\text{Minimum Luminance of five points (brightness)}}$$

10. Display Quality

The display quality of the color TFT-LCD module shall be in compliance with the Incoming Inspection Standard.

11. Handling Precautions

a) Be sure to turn off the power supply when inserting or disconnecting the cable.

b) Be sure to design the cabinet so that the module can be installed without any extra stress such as warp or twist.

c) Since the front polarizer is easily damaged, pay attention not to scratch it.

d) Wipe off water drop immediately. Long contact with water may cause discoloration or spots.

e) When the panel surface is soiled, wipe it with absorbent cotton or other soft cloth.

f) Since the panel is made of glass, it may break or crack if dropped or bumped on hard surface. Handle with care.

g) Since CMOS LSI is used in this module, take care of static electricity and injure the human earth when handling.

h) Observe all other precautionary requirements in handling components.

i) This module has its circuitry PCBs on the rear side and should be handled carefully in order not to be stressed.

j) When handling LCD modules and assembling them into cabinets, please be noted that long-term storage in the environment of oxidization or deoxidization gas and the use of such materials as reagent, solvent, adhesive, resin, etc. which generate these gasses, may cause corrosion and discoloration of the LCD modules.

k) Laminated film is attached to the module surface to prevent it from being scratched . Peel the film off slowly just before the use with strict attention to electrostatic charges. Ionized air shall be blown over during the action. Blow off the 'dust' on the polarizer by using an ionized nitrogen gun, etc..

l)Cold cathode fluorescent lamp in LCD panel contains a small amount of mercury, please follow local ordinances or regulations for disposal.

12. Packing form

a) Piling number of cartons : Max.5

b) Package quantity in one carton : 10 pcs

c) Carton size : 438(W)×372(D)×307(H) mm

d) Total mass of one carton filled with full modules : 7900g

Packing form is shown in Fig.2

13. Reliability test items

No.	Test item	Conditions
1	High temperature storage test	Ta = 60°C 240h
2	Low temperature storage test	Ta = -25°C 240h
3	High temperature & high humidity operation test	Ta = 40°C ; 95 %RH 240h (No condensation)
4	High temperature operation test	Ta = 50°C 240h (The panel temp. must be less than 60°C)
5	Low temperature operation test	Ta = 0°C 240h
6	Vibration test (non- operating)	Frequency : 10～57Hz/Vibration width (one side):0.075mm : 58～500Hz/Gravity:9.8m/s^2 Sweep time : 11 minutes Test period : 3 hours (1 hour for each direction of X,Y,Z)
7	Shock test (non- operating)	Max. gravity : 490 m/s^2 Pulse width : 11 ms, sine wave Direction : ±X,±Y,±Z once for each direction.

14. Others

1) Lot No. Label:

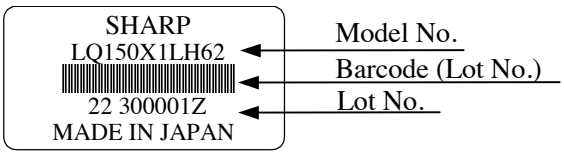

2) Adjusting volume have been set optimally before shipment, so do not change any adjusted value. If adjusted value is changed, the technical literature may not be satisfied.

3) Disassembling the module can cause permanent damage and should be strictly avoided.

4) Please be careful since image retention may occur when a fixed pattern is displayed for a long time.

5) If any problem occurs in relation to the description of this specification , it shall be resolved through discussion with spirit of cooperation.

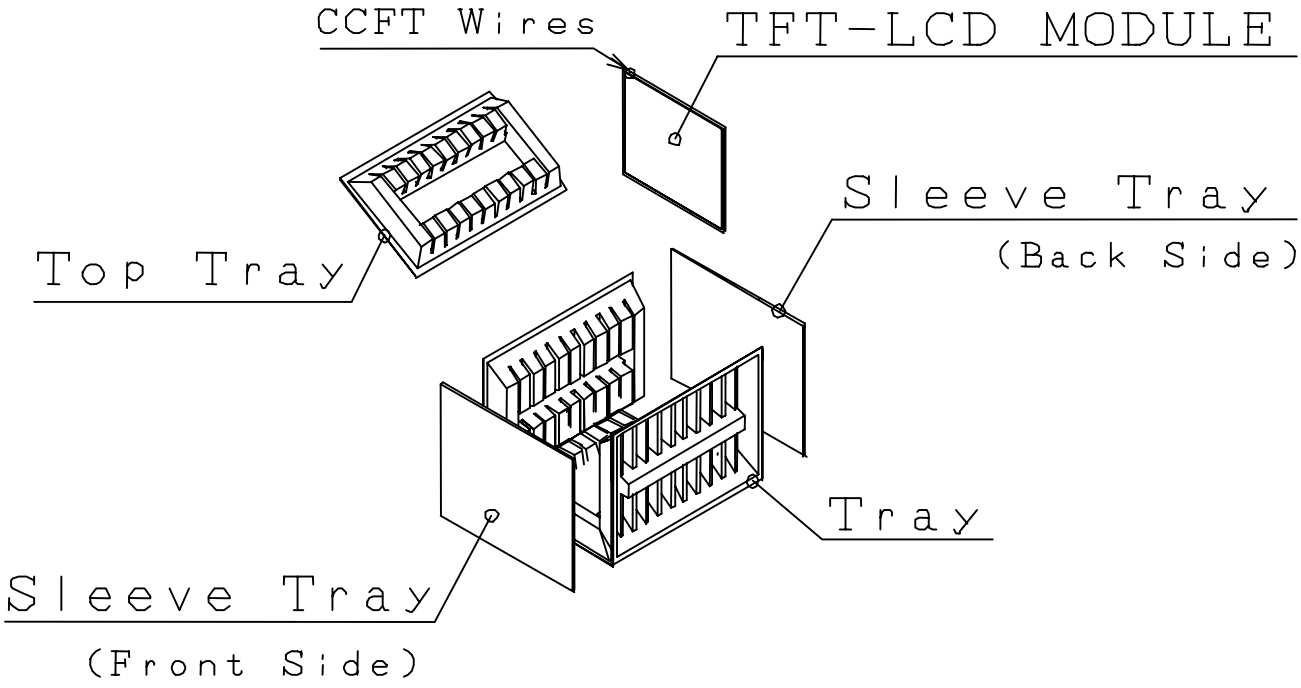

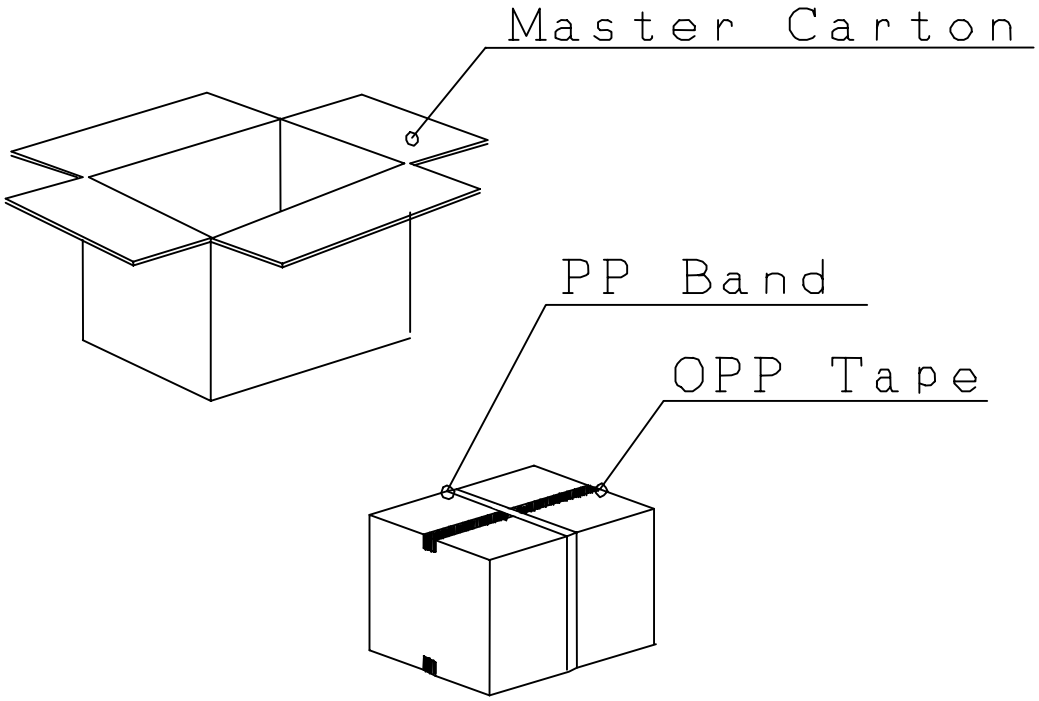

Fig.3 Packing Form

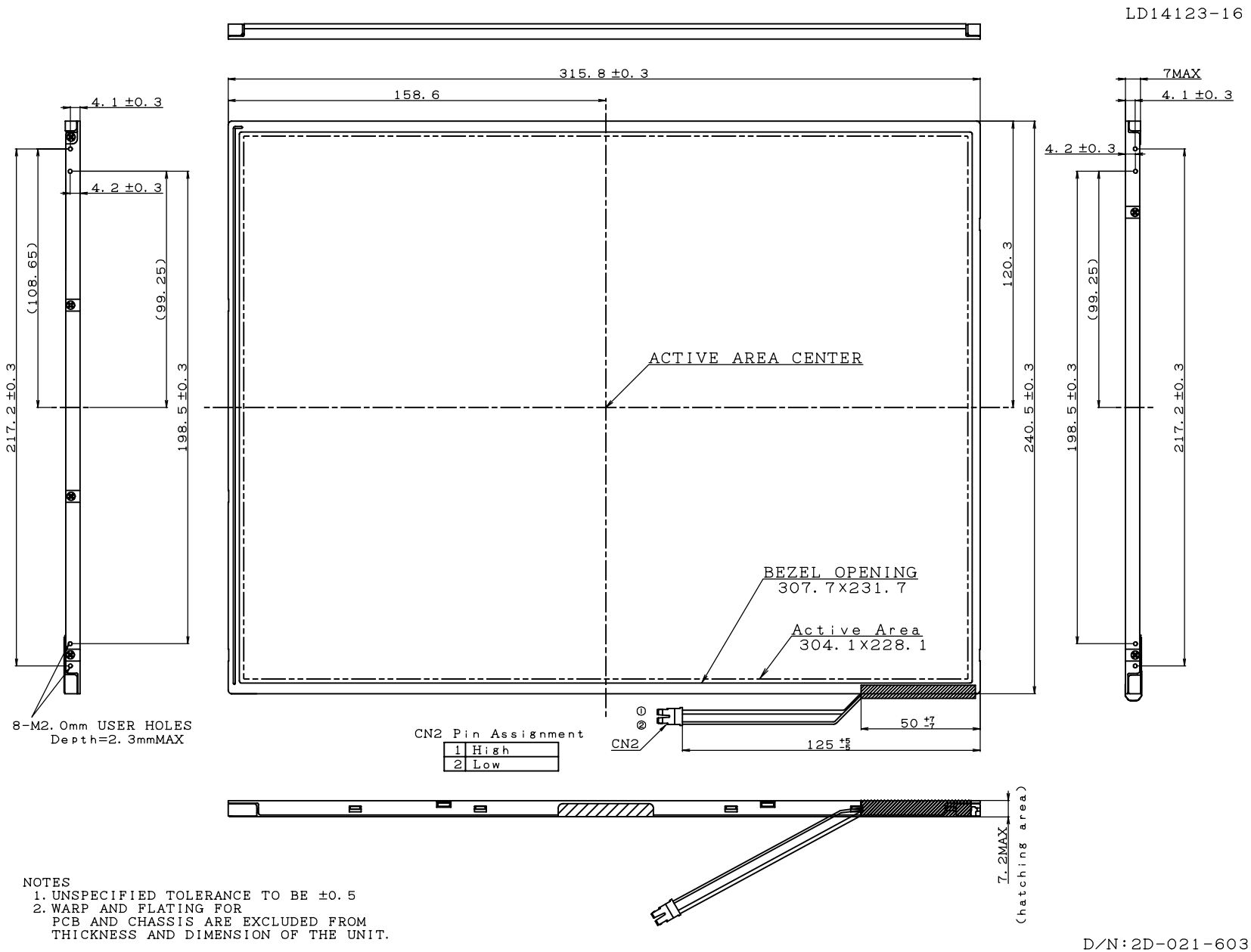

Fig. 1-1 LQ150X1LH62 OUTLINE DIMENSIONS

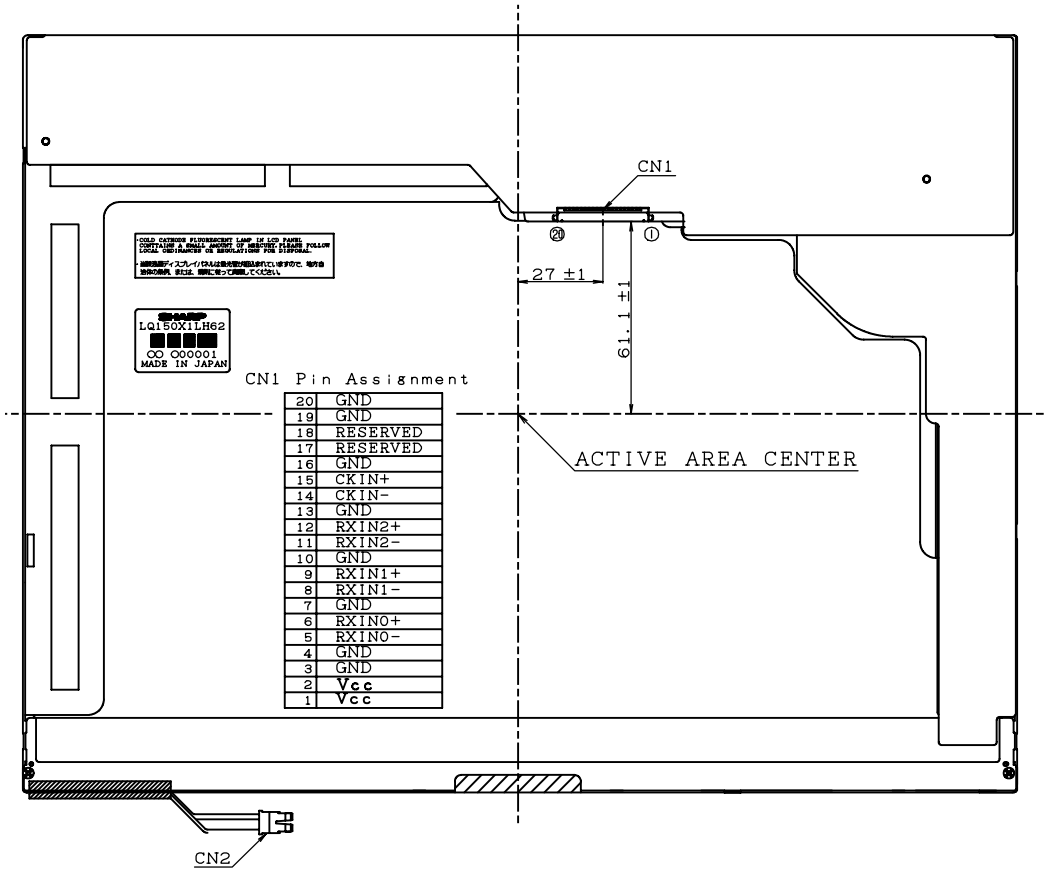

CN1 Pin Assignment

20	GND
19	GND
18	RESERVED
17	RESERVED
16	GND
15	CKIN+
14	CKIN-
13	GND
12	RXIN2+
11	RXIN2-
10	GND
9	RXIN1+
8	RXIN1-
7	GND
6	RXIN0+
5	RXIN0-
4	GND
3	GND
2	Vcc
1	Vcc

※CN1:FI-SEB20P-HF10 (JAE)
CN2:BHSR-02VS-1(JST)

D/N:2D-021-603

Fig. 1-2 LQ150X1LH62 OUTLINE DIMENSIONS